COMMONWEALTH of VIRGINIA

Thelma D. Drake
Director

DEPARTMENT OF RAIL AND PUBLIC TRANSPORTATION
600 EAST MAIN STREET, SUITE 2102
RICHMOND, VA 23219

(804) 786-4440
FAX (804) 225 3752
VIRGINIA RELAY CENTER
1-800-828-1120 (TDD)

NOTICE OF AWARD

Contract No.	505-13-CC0010
Date	June 19, 2013
Vendor Reference No.	EIN 54-0806176
Name	Sonny Merryman, Inc.
Address	P.O. Box 495, Rustburg, Virginia 24588
Your Bid/Offer Dated	May 23, 2013
In Response To	IFB 505-13-BB0002
To Furnish	15 Passenger Body on Chassis Buses
During the Period	June 19, 2013 – June 18, 2014

hereby is accepted at prices and terms stated, subject to all conditions and requirements of the solicitations, purchase specifications, warranties, performance bond and other stipulations, if any.

The solicitation, your bid sealed bid including approved request for equals and this notice of acceptance constitute the contract.

Contract Officer: Ashly Nusbaum

INVITATION
FOR
BID

505-13-BB0002

Contract For
15 Passenger Body on Chassis (BOC) Buses

There will be an optional pre-bid conference for this solicitation
<u>April 25, 2013 at 2:00 p.m.</u>

SET-ASIDE FOR SMALL BUSINESSES –
Vans, Passenger (Regular and Handicapped Equipped)

Vendor Registration: In order to receive an award the firm must be a registered Vendor with eVA.

Note: This public body does not discriminate against faith based organizations in accordance with the *Code of Virginia*, § 2.2-4343.1 or against a Bidder because of race, religion, color, sex, national origin, age, disability, or any other basis prohibited by state law relating to discrimination in employment.

DRPT
Virginia Department of Rail and Public Transportation
The Smartest Distance Between Two Points

Page Left Blank Intentionally

COMMONWEALTH OF VIRGINIA
DEPARTMENT OF RAIL AND PUBLIC TRANSPORTATION
600 East Main Street, Suite 2102
RICHMOND, VIRGINIA 23219

INVITATION FOR BIDS (IFB) - TERM CONTRACT
SET-ASIDE FOR SMALL BUSINESSES – Vans, Passenger (Regular and Handicapped Equipped)

The purpose of this invitation is to solicit sealed bids whereby contract(s) may be established for furnishing the equipment, materials, supplies, and/or services described herein to authorized users, if and when ordered, during the contract period.

Sealed bids will be received in the division's office at 600 East Main Street, Suite 2102 Reception Desk, Richmond, Virginia 23219 until the due date and hour shown below and then publicly opened. Failure to bid without explanation may remove your firm from the vendor registration list for that particular commodity.

Commodity:	**15 Passenger BOC (22 Ft. Wide Body)**	Issuance Date:	**April 16, 2013**
UNSPSPC CODE:	**25101505**	NIGP Commodity Code:	**07192**
Authorized Users:	**Entities within theTransportation Secretariat and Grantees of DRPT**	Pre-Bid Conference:	**April 25, 2013, 2:00 pm**
		Bid Due Date:	**May 23, 2013, 4:00 pm**
Contract Period:	**One year**	Bid Opening Date:	**May 24, 2013, 2:00 pm**
Purchase Officer:	**Ashley Nusbaum**	Phone:	**(804) 786-2890**

Important: **See page 17 of the IFB (*eVA* Business to Government Web Site) (General Term 22)**

Note: This public body does not discriminate against faith-based organizations in accordance with the *Code of Virginia*, § 2.2-4343.1or against a Bidder because of race, religion, color, sex, national origin, age, disability, or any other basis prohibited by state law relating to discrimination in employment.

In compliance with this invitation for bid and to all the conditions imposed therein, the undersigned offers and agrees to furnish the goods/services at the bid price(s) indicated. I certify that I am authorized to sign this bid.

Company Name & Address

_____

_____

_____

_____

FIN or SS Number: _____

Dun and Bradstreet No. (D-U-N-S®): _____

Prompt Payment Discount _____% _____days

Date _____

By _____
Signature in ink

Name _____
(Please Print)

Title _____

Telephone Number _____

FAX # _____

E-mail _____

BIDDERS ARE CAUTIONED THAT ANY RESULTING CONTRACT AWARDED WILL REQUIRE THAT THE CONTRACTOR RESPOND TO PURCHASES MADE WHENEVER AND WHEREVER PLACED BY THOSE AUTHORIZED USERS HAVING REQUIREMENTS FOR THESE GOODS/SERVICES. ALL ITEMS SHALL BE F.O.B. DELIVERED TO ANY SUCH POINT WITHIN THE COMMONWEALTH OF VIRGINIA.

Page Left Blank Intentionally

INVITATION FOR BIDS

TABLE OF CONTENTS

A. Purpose **5**

B. Scope of Work **5**

C. Bid Preparation and Submission Requirements **5**

D. Bid Evaluation **8**

E. Method of Award **8**

ATTACHMENTS

Attachment A: Required General Terms and Conditions **10**

Attachment B: Special Terms and Conditions **18**

Attachment C: Specifications **24**

Attachment D: Purchase Volume and Dollar Report **38**

Attachment E: Pricing Schedule / Options **40**

Attachment F: Small Business Subcontracting Plan **44**

Attachment G: Vendor Data Sheet **48**

Attachment H: Agencies (Grantees) Funded by DRPT **50**

Attachment I: State Corporation Commission (SCC) Form **52**

Attachment J: Federal Conditions of Manufacturer/Vendor **54**

A. **PURPOSE:** The purpose of this Invitation for Bids (IFB) is to solicit sealed bids to establish a contract for the 15 Passenger Body On Chassis Bus for agencies/facilities within the Transportation Secretariat and grantees of the Virginia Department of Rail and Public Transportation ("DRPT"). The number of vehicles ordered from this contract is estimated at 100.

B. **SCOPE OF WORK:** It is the intent of this specification to describe the design requirements in Attachment C – Specifications and Attachment E – Options for 15 Passenger Body On Chassis Buses**.** The buses must be rugged enough to withstand rigorous intensive daily transit service operations and provide maximum reliability and availability, with a minimum of maintenance and repair time. They shall exhibit maximum passenger appeal in appearance, comfort and safety, combined with excellence in reliability, operating characteristics, efficiency, and economy of operation. It shall have a minimum expected life of four years or 100,000 miles, whichever comes first, and is intended for the widest possible spectrum of adult passengers, elderly, and persons with disabilities. In addition, it shall meet all federal conditions of manufacturer/vendor under Attachment J as stated herein.

C. **BID PREPARATION AND SUBMISSION REQUIREMENTS:**

Proposed Procurement Schedule:

Issue Date of IFB	April 16, 2013
Pre-Bid Conference	April 25, 2013
Deadline for receipt of Deviations	May 6, 2013
Deadline for receipt of Bids	May 23, 2013
Public Opening of Bids	May 24, 2013
Proposed Contract Award	May 30, 2013

(Proposed Procurement Schedule is subject to change)

1. **General Bid Submission Requirements:**

a. The competitive sealed bidding process will be used for this solicitation.

b. Although DRPT reserves the right at its option to request any Bidder to submit additional information that may be necessary to clarify the bid and to submit any additional information which DRPT deems necessary in order to evaluate the Bidder's bid and determine responsiveness and responsibility, there will be no negotiation.

c. Only paper submissions will be accepted for this solicitation.

d. Failure to completely and accurately follow all of the instructions for the IFB process may result in rejection of the bid. Bids should be prepared simply and economically, providing a straightforward, concise description of capabilities.

Failure to submit any of the required information may result in the bid being declared non-responsive.

e. If bidding a deviation from any of the specifications set forth in Attachment C – Specifications or Attachment E – Pricing Schedule / Options, the Bidder shall note and explain how the Bidder's respective product deviates from the specified product. **Deviations must be submitted to the address listed on page seven no later than May 6, 2013.** DRPT will review requested deviations and respond within five business days. Bids which contain unacceptable deviations may be rejected..

f. The Bidder may include terms and conditions which are sought to be included in addition to those set forth in Attachment A – Required General Terms and Conditions and Attachment B – Special Terms and Conditions, provided the Bidder's additional terms do not conflict with the terms and conditions or with any of the IFB requirements. If DRPT, in its sole discretion, determines that any of the Bidder's additional terms are in conflict with any of the IFB requirements, the Bidder may be required to immediately remove them from the bid. If the additional terms are not immediately removed, the entire bid may be rejected and determined to be nonresponsive.

g. Questions regarding specifications or other solicitation documents should be directed to Ashley Nusbaum at ashley.nusbaum@drpt.virginia.gov. No questions will be answered by phone or verbally. All questions are due by May 16, 2013 and will be answered by an addendum no later than May 20, 2013. The addendum will be posted on the Virginia Business Opportunities (VBO) website. It is the responsibility of the Bidder to download the addendum to include with the bid.

3. **Submission of Bids:**

a. The sealed envelope containing the bid must be submitted on or before the bid due date and time specified on the IFB signature sheet which is page one of this solicitation.

b. The Bidder is required to submit the following items in order for their bid to be complete and accepted by DRPT. Failure to submit all information requested may result in DRPT eliminating the bid from consideration, at DRPT's sole discretion.

i. The IFB signature sheet, signed, containing the name of the primary contact person for this bid, their address, e-mail, facsimile number, and telephone number.

ii. The completed bid including all specific items or data requested in the IFB, Attachment F – Small Business Subcontracting Plan, Attachment G

– Vendor Data Sheet, Attachment I – State Corporation Commission (SCC) Form, Attachment J – Federal Conditions of Manufacturer/Vendor.

iii. All IFB addenda acknowledgements, if any, signed and filled out as required.

c. The Bidder shall submit their entire bid to DRPT in a sealed envelope as follows:

i. One complete original bid.
ii. Four copies of the complete original bid.
iii. One electronic copy on a cd.
iv. One redacted version on a cd (if including proprietary information)

Proprietary information must be clearly marked as proprietary prior to submittal. If the Bidder wishes to submit a version of the bid that has proprietary information redacted, the redacted version must be submitted in electronic format on a CD and must redact all proprietary information. Section numbers which are redacted must be identified as follows: Example: Section 3, paragraph B: "Redacted." The Bidder is responsible for ensuring that the redacted version of the bid is carefully edited, altered, and refined in order to protect and maintain complete confidentiality of protected information.

d. DRPT will not compensate the Bidder for the cost of bid preparation whether or not an award is made.

e. When submitting a paper response to a solicitation, the Bidder shall return the signed response in a sealed envelope. The envelope should be addressed and delivered to:

Ashley Nusbaum
Commonwealth of Virginia
Department of Rail and Public Transportation
600 East Main Street, Suite 2102
Richmond, VA 23219

The envelope should also provide the following information: Name of Bidder; Street or Box Number, City, State, Zip Code; IFB Number; IFB Title; Close Date and Time.

i. No other unrequested correspondence or other bids should be placed in the envelope. It is the Bidder's responsibility to make certain responses are at the correct address when bids are due. Bids not at the specified location by or before the specified time and date of closing **WILL NOT**

be accepted, even if they are elsewhere in the building. Bids received after the closing date and time will be rejected.

f. Faxed or electronic bids will not be accepted.

g. Ownership of all data, materials, and documentation originated and prepared for DRPT pursuant to the IFB shall belong exclusively to DRPT and be subject to public inspection in accordance with the Virginia Freedom of Information Act ("FOIA").

D. **BID EVALUATION**:

1. Each bid will be evaluated on the information provided to determine if the bid is responsive and responsible based on the mandatory requirements specified in the IFB.

2. Written or oral discussions from Bidders may be requested to clarify or amplify the material in the bid. Bidders must respond to any request for clarification from DRPT within the deadline specified by DRPT at the time of the request. Inability of DRPT to reach a Bidder for clarification and/or failure of a Bidder to respond within the time stated may result in rejection of the Bidder's bid.

3. Bids will be publicly opened and the names of the Bidders responding will be read and recorded at the date and time specified on the IFB signature page which is page one of this solicitation. Verbal or telephonic inquiries regarding the status of bids will not be accepted.

E. **METHOD OF AWARD:** Following the opening of the bids in accordance with the process above, an award will be made based on the lowest responsive and responsible bid excluding options. DRPT reserves the right to reject any or all bids, in whole or in part, to waive informalities and to delete items prior to making the award, whenever it is deemed in the sole opinion of DRPT, to be in its best interest.

Page Left Blank Intentionally

ATTACHMENT A

REQUIRED GENERAL TERMS AND CONDITIONS

1. **VENDORS MANUAL:** This solicitation is subject to the provisions of the Commonwealth of Virginia *Vendors Manual* and any changes or revisions thereto, which are hereby incorporated into this contract in their entirety. The procedure for filing contractual claims is in section 7.19 of the *Vendors Manual*. A copy of the manual is normally available for review at the purchasing office and is accessible on the Internet at http://www.dgs.virginia.gov/Services/tabid/121/Default.aspx under "Procurement Manuals."

2. **APPLICABLE LAWS AND COURTS:** This solicitation and any resulting contract shall be governed in all respects by the laws of the Commonwealth of Virginia and any litigation with respect thereto shall be brought in the courts of the Commonwealth. The agency and the Bidder are encouraged to resolve any issues in controversy arising from the award of the contract or any contractual dispute using the Alternative Dispute Resolution (ADR) procedures (*Code of Virginia*, § 2.2-4366). ADR procedures are described in Chapter 9 of the *Vendors Manual*. The Bidder shall comply with all applicable federal, state and local laws, rules and regulations.

3. **ANTI-DISCRIMINATION:** By submitting their bids, Bidders certify to DRPT that they will conform to the provisions of the Federal Civil Rights Act of 1964, as amended, as well as the Virginia Fair Employment Contracting Act of 1975, as amended, where applicable, the Virginians With Disabilities Act, the Americans With Disabilities Act (ADA) and § 2.2-4311 of the Virginia Public Procurement Act (VPPA). If the award is made to a faith-based organization, the organization shall not discriminate against any recipient of goods, services, or disbursements made pursuant to the contract on the basis of the recipient's religion, religious belief, refusal to participate in a religious practice, or on the basis of race, age, color, gender or national origin and shall be subject to the same rules as other organizations that contract with public bodies to account for the use of the funds provided; however, if the faith-based organization segregates public funds into separate accounts, only the accounts and programs funded with public funds shall be subject to audit by the public body. (*Code of Virginia*, § 2.2-4343.1(E)).

   In every contract over $10,000 the provisions in A. and B. below apply:

   A. During the performance of this contract, the Bidder agrees as follows:

      1. The Bidder will not discriminate against any employee or applicant for employment because of race, religion, color, sex, national origin, age, disability, or any other basis prohibited by state law relating to discrimination in employment, except where there is a bona fide occupational qualification reasonably necessary to the normal operation of the Bidder. The Bidder agrees to post in conspicuous places, available to employees and applicants for employment, notices setting forth the provisions of this nondiscrimination clause.

2. The Bidder, in all solicitations or advertisements for employees placed by or on behalf of the Bidder, will state that such Bidder is an equal opportunity employer.

3. Notices, advertisements and solicitations placed in accordance with federal law, rule or regulation shall be deemed sufficient for the purpose of meeting these requirements.

B. The Bidder will include the provisions of A. above in every subcontract or purchase order over $10,000, so that the provisions will be binding upon each subcontractor or vendor.

4. **ETHICS IN PUBLIC CONTRACTING:** By submitting their bids, Bidders certify that their bids are made without collusion or fraud and that they have not offered or received any kickbacks or inducements from any other bidder, supplier, manufacturer or subcontractor in connection with their bid, and that they have not conferred on any public employee having official responsibility for this procurement transaction any payment, loan, subscription, advance, deposit of money, services or anything of more than nominal value, present or promised, unless consideration of substantially equal or greater value was exchanged.

5. **IMMIGRATION REFORM AND CONTROL ACT OF 1986:** By submitting their bids, the Bidders certify that they do not and will not during the performance of this contract knowingly employ an unauthorized alien worker as defined in the Federal Immigration Reform and Control Act of 1986.

6. **DEBARMENT STATUS:** By submitting their bids, Bidders certify that they are not currently debarred by the Commonwealth of Virginia from submitting bids or proposals on contracts for the type of goods and/or services covered by this solicitation, nor are they an agent of any person or entity that is currently so debarred.

7. **ANTITRUST:** By entering into a contract, the Bidder conveys, sells, assigns, and transfers to DRPT all rights, title and interest in and to all causes of action it may now have or hereafter acquire under the antitrust laws of the United States and the Commonwealth of Virginia, relating to the particular goods or services purchased or acquired by DRPT under said contract.

8. **MANDATORY USE OF STATE FORM AND TERMS AND CONDITIONS FOR INVITATION FOR BID (IFB):** Failure to submit a bid on the official state form provided for that purpose shall be a cause for rejection of the bid. Modification of or additions to any portion of the IFB may be cause for rejection of the bid; however, DRPT reserves the right to decide, on a case by case basis, in its sole discretion, whether to reject such a bid as nonresponsive. As a precondition to its acceptance, DRPT may, in its sole discretion, request that the Bidder withdraw or modify nonresponsive portions of a bid which do not affect quality, quantity, price, or delivery. No modification of or addition to the provisions of the contract shall be effective unless reduced to writing and signed by the parties.

9. **CLARIFICATION OF TERMS:** If any prospective Bidder has questions about the specifications or other solicitation documents, the prospective Bidder should contact the buyer whose name appears on the face of the solicitation no later than five working days before the due date. Any revisions to the solicitation will be made only by addendum issued by the buyer.

10. **PAYMENT:**

A. **To Prime Bidder**:

1. Invoices for items ordered, delivered and accepted shall be submitted by the Bidder directly to the payment address shown on the purchase order/contract. All invoices shall show the state contract number and/or purchase order number; social security number (for individual Bidders) or the federal employer identification number (for proprietorships, partnerships, and corporations).

2. Any payment terms requiring payment in less than 30 days will be regarded as requiring payment 30 days after invoice or delivery, whichever occurs last. This shall not affect offers of discounts for payment in less than 30 days, however.

3. All goods or services provided under this contract or purchase order, that are to be paid for with public funds, shall be billed by the Bidder at the contract price, regardless of which public agency is being billed.

4. The following shall be deemed to be the date of payment: the date of postmark in all cases where payment is made by mail, or the date of offset when offset proceedings have been instituted as authorized under the Virginia Debt Collection Act.

5. **Unreasonable Charges**. Under certain emergency procurements and for most time and material purchases, final job costs cannot be accurately determined at the time orders are placed. In such cases, Bidders should be put on notice that final payment in full is contingent on a determination of reasonableness with respect to all invoiced charges. Charges which appear to be unreasonable will be researched and challenged, and that portion of the invoice held in abeyance until a settlement can be reached. Upon determining that invoiced charges are not reasonable, DRPT shall promptly notify the Bidder, in writing, as to those charges which it considers unreasonable and the basis for the determination. A Bidder may not institute legal action unless a settlement cannot be reached within 30 days of notification. The provisions of this section do not relieve an agency of its prompt payment obligations with respect to those charges which are not in dispute (*Code of Virginia,* § 2.2-4363).

B. **To Subcontractors**:

1. A Bidder awarded a contract under this solicitation is hereby obligated:

(a) To pay the subcontractor(s) within seven days of the Bidder's receipt of payment from DRPT for the proportionate share of the payment received for work performed by the subcontractor(s) under the contract; or

(b) To notify the agency and the subcontractor(s), in writing, of the Bidder's intention to withhold payment and the reason.

2. The Bidder is obligated to pay the subcontractor(s) interest at the rate of one percent per month (unless otherwise provided under the terms of the contract) on all amounts owed by the Bidder that remain unpaid seven days following receipt of payment from DRPT, except for amounts withheld as stated in (b) above. The date of mailing of any payment by U. S. Mail is deemed to be payment to the addressee. These provisions apply to each sub-tier Bidder performing under the primary contract. A Bidder's obligation to pay an interest charge to a subcontractor may not be construed to be an obligation of DRPT.

C. Each prime Bidder who wins an award in which provision of a SWAM procurement plan is a condition to the award, shall deliver to the contracting agency or institution, on or before request for final payment, evidence and certification of compliance (subject only to insubstantial shortfalls and to shortfalls arising from subcontractor default) with the SWAM procurement plan. Final payment under the contract in question may be withheld until such certification is delivered and, if necessary, confirmed by the agency or institution, or other appropriate remedies may be assessed in lieu of withholding such payment.

D. The Commonwealth of Virginia encourages Bidders and subcontractors to accept electronic and credit card payments.

11. **PRECEDENCE OF TERMS:** The following General Terms and Conditions from the *Vendors Manual,* APPLICABLE LAWS AND COURTS, ANTI-DISCRIMINATION, ETHICS IN PUBLIC CONTRACTING, IMMIGRATION REFORM AND CONTROL ACT OF 1986, DEBARMENT STATUS, ANTITRUST, MANDATORY USE OF STATE FORM AND TERMS AND CONDITIONS, CLARIFICATION OF TERMS, PAYMENT shall apply in all instances. In the event there is a conflict between any of the other General Terms and Conditions and any Special Terms and Conditions in this solicitation, the Special Terms and Conditions shall apply.

12. **QUALIFICATIONS OF BIDDERS:** DRPT may make such reasonable investigations as deemed proper and necessary to determine the ability of the Bidder to perform the services/furnish the goods and the Bidder shall furnish to DRPT all such information and data for this purpose as may be requested. DRPT reserves the right to inspect the Bidder's physical facilities prior to award to satisfy questions regarding the Bidder's capabilities. DRPT further reserves the right to reject any bid if the evidence submitted by, or investigations of, such Bidder fails to satisfy DRPT that such Bidder is properly qualified to

carry out the obligations of the contract and to provide the services and/or furnish the goods contemplated therein.

13. **TESTING AND INSPECTION:** DRPT reserves the right to conduct any test/inspection it may deem advisable to assure goods and services conform to the specifications.

14. **ASSIGNMENT OF CONTRACT:** A contract shall not be assignable by the Bidder in whole or in part without the written consent of DRPT.

15. **CHANGES TO THE CONTRACT:** Changes can be made to the contract in any of the following ways:

    A. The parties may agree in writing to modify the scope of the contract. An increase or decrease in the price of the contract resulting from such modification shall be agreed to by the parties as a part of their written agreement to modify the scope of the contract.

    B. DRPT may order changes within the general scope of the contract at any time by written notice to the Bidder. Changes within the scope of the contract include, but are not limited to, things such as services to be performed, the method of packing or shipment, and the place of delivery or installation. The Bidder shall comply with the notice upon receipt. The Bidder shall be compensated for any additional costs incurred as the result of such order and shall give DRPT a credit for any savings. Said compensation shall be determined by one of the following methods:

        1. By mutual agreement between the parties in writing; or

        2. By agreeing upon a unit price or using a unit price set forth in the contract, if the work to be done can be expressed in units, and the Bidder accounts for the number of units of work performed, subject to DRPT's right to audit the Bidder's records and/or to determine the correct number of units independently; or

        3. By ordering the Bidder to proceed with the work and keep a record of all costs incurred and savings realized. A markup for overhead and profit may be allowed if provided by the contract. The same markup shall be used for determining a decrease in price as the result of savings realized. The Bidder shall present DRPT with all vouchers and records of expenses incurred and savings realized. DRPT shall have the right to audit the records of the Bidder as it deems necessary to determine costs or savings. Any claim for an adjustment in price under this provision must be asserted by written notice to DRPT within 30 days from the date of receipt of the written order from DRPT. If the parties fail to agree on an amount of adjustment, the question of an increase or decrease in the contract price or time for performance shall be resolved in accordance with the procedures for resolving disputes provided by the Disputes Clause of this contract or, if there is none, in accordance with the disputes provisions of the Commonwealth of Virginia *Vendors Manual*. Neither the existence of a claim nor a dispute resolution process, litigation or any other provision of this contract shall excuse the Bidder from promptly

complying with the changes ordered by DRPT or with the performance of the contract generally.

16. **DEFAULT:** In case of failure to deliver goods or services in accordance with the contract terms and conditions, DRPT, after due oral or written notice, may procure them from other sources and hold the Bidder responsible for any resulting additional purchase and administrative costs. This remedy shall be in addition to any other remedies which DRPT may have.

17. **TAXES:** Sales to the Commonwealth of Virginia are normally exempt from State sales tax. State sales and use tax certificates of exemption, Form ST-12, will be issued upon request. Deliveries against this contract shall usually be free of Federal excise and transportation taxes. The Commonwealth's excise tax exemption registration number is 54-73-0076K.

18. **DELIVERY:** Vehicles shall be delivered to the various ordering entities throughout the State as required. The ordering entity will pay 60 cents per mile for mileage in excess of the distance from the dealer's location to 600 E. Main Street, Richmond, VA 23219. A 60 cents per mile credit will apply if the distance is less than the mileage to 600 E. Main Street. Mileage will be determined based on Yahoo.com (map, driving directions). Mileage shall be calculated between the dealer's address and the delivery address. Delivery will be accepted between the hours of 8:00 A.M and 4:30 P.M. Monday through Friday, except holidays.

19. **ANNOUNCEMENT OF AWARD:** Upon the award or the announcement of the decision to award a contract, as a result of this solicitation, DRPT will publicly post such notice on the DGS/DPS eVA web site (www.eva.virginia.gov) for a minimum of 10 days.

20. **DRUG-FREE WORKPLACE:** During the performance of this contract, the Bidder agrees to (i) provide a drug-free workplace for the Bidder's employees; (ii) post in conspicuous places, available to employees and applicants for employment, a statement notifying employees that the unlawful manufacture, sale, distribution, dispensation, possession, or use of a controlled substance or marijuana is prohibited in the Bidder's workplace and specifying the actions that will be taken against employees for violations of such prohibition; (iii) state in all solicitations or advertisements for employees placed by or on behalf of the Bidder that the Bidder maintains a drug-free workplace; and (iv) include the provisions of the foregoing clauses in every subcontract or purchase order of over $10,000, so that the provisions will be binding upon each subcontractor or vendor.

    For the purposes of this section, "drug-free workplace" means a site for the performance of work done in connection with a specific contract awarded to a Bidder, the employees of whom are prohibited from engaging in the unlawful manufacture, sale, distribution, dispensation, possession or use of any controlled substance or marijuana during the performance of the contract.

21. **NONDISCRIMINATION OF BIDDERS**: A bidder shall not be discriminated against in the solicitation or award of this contract because of race, religion, color, sex, national origin, age, or disability, faith-based organizational status, any other basis prohibited by state law relating to discrimination in employment or because the Bidder employs ex-offenders unless

DRPT has made a written determination that employing ex-offenders on the specific contract is not in its best interest. If the award of this contract is made to a faith-based organization and an individual, who applies for or receives goods, services, or disbursements provided pursuant to this contract objects to the religious character of the faith-based organization from which the individual receives or would receive the goods, services, or disbursements, the public body shall offer the individual, within a reasonable period of time after the date of his objection, access to equivalent goods, services, or disbursements from an alternative provider.

22. **eVA BUSINESS-TO-GOVERNMENT VENDOR REGISTRATION**: The eVA Internet electronic procurement solution, website portal www.eVA.virginia.gov, streamlines and automates government purchasing activities in the Commonwealth. The eVA portal is the gateway for vendors to conduct business with state agencies and public bodies. All vendors desiring to provide goods and/or services to the Commonwealth shall participate in the eVA Internet e-procurement solution either through the eVA Basic Vendor Registration Service or eVA Premium Vendor Registration Service. All Bidders must register in eVA and pay the Vendor Transaction Fees specified below; failure to register will result in the bid/ being rejected.

Effective July 1, 2011, vendor registration and registration-renewal fees have been discontinued. Registration options are as follows:

a. eVA Basic Vendor Registration Service: eVA Basic Vendor Registration Service includes electronic order receipt, vendor catalog posting, on-line registration, electronic bidding, and the ability to research historical procurement data available in the eVA purchase transaction data warehouse.

b. eVA Premium Vendor Registration Service: eVA Premium Vendor Registration Service includes all benefits of the eVA Basic Vendor Registration Service plus automatic email or fax notification of solicitations and amendments.

Vendor transaction fees are determined by the date the original purchase order is issued and are as follows:

a. For orders issued prior to August 16, 2006, the Vendor Transaction Fee is 1%, capped at a maximum of $500 per order.

b. For orders issued August 16, 2006 thru June 30, 2011, the Vendor Transaction Fee is:
(i) DMBE-certified Small Businesses: 1%, capped at $500 per order.
(ii) Businesses that are not DMBE-certified Small Businesses: 1%, capped at $1,500 per order.

c. For orders issued July 1, 2011 thru June 30, 2013, the Vendor Transaction Fee is:
(i) DMBE-certified Small Businesses: 0.75%, capped at $500 per order.
(ii) Businesses that are not DMBE-certified Small Businesses: 0.75%, capped at $1,500 per order.

d. For orders issued July 1, 2013 and after, the Vendor Transaction Fee is:
(i) DMBE-certified Small Businesses: 1%, capped at $500 per order.
(ii) Businesses that are not DMBE-certified Small Businesses: 1%, capped at $1,500 per order

The specified vendor transaction fee will be invoiced, by the Commonwealth of Virginia Department of General Services, approximately 30 days after the corresponding purchase order is issued and payable 30 days after the invoice date. Any adjustments (increases/decreases) will be handled through purchase order changes.

23. **SET-ASIDES**. This solicitation is set-aside for DMBE-certified small business participation only when designated "SET-ASIDE FOR SMALL BUSINESSES" in the solicitation. DMBE-certified small businesses are those businesses that hold current small business certification from the Virginia Department of Minority Business Enterprise. This shall not exclude DMBE-certified women-owned and minority-owned businesses when they have received the DMBE small business certification. For purposes of award, Bidders shall be deemed small business if and only if they are certified as such by DMBE on the due date for receipt of bids.

24. **BID PRICE CURRENCY**. Unless stated otherwise in the solicitation, Bidders shall state bid/ prices in U.S. dollars.

25. **AUTHORIZATION TO CONDUCT BUSINESS IN THE COMMONWEALTH:** A Bidder organized as a stock or nonstock corporation, limited liability company, business trust, or limited partnership or registered as a registered limited liability partnership shall be authorized to transact business in the Commonwealth as a domestic or foreign business entity if so required by Title 13.1 or Title 50 of the *Code of Virginia* or as otherwise required by law. Any business entity described above that enters into a contract with a public body pursuant to the Virginia Public Procurement Act shall not allow its existence to lapse or its certificate of authority or registration to transact business in the Commonwealth, if so required under Title 13.1 or Title 50, to be revoked or cancelled at any time during the term of the contract. A public body may void any contract with a business entity if the business entity fails to remain in compliance with the provisions of this section.

26. **AUDIT:** The Bidder shall retain all books, records, and other documents relative to this contract for five years after final payment, or until audited by the Commonwealth of Virginia, whichever is sooner. The agency, its authorized agents, and/or state auditors shall have full access to and the right to examine any of said materials during said period.

ATTACHMENT B

SPECIAL TERMS AND CONDITIONS

1. **eVA BUSINESS-TO-GOVERNMENT CONTRACTS AND ORDERS:** Internet electronic procurement solution, website portal www.eva.virginia.gov, streamlines and automates government purchasing activities in the Commonwealth. The portal is the gateway for vendors to conduct business with state agencies and public bodies.

   Vendors desiring to provide goods and/or services to the Commonwealth shall participate in the eVA Internet e-procurement solution and agree to comply with the following:

   If this solicitation is for a term contract, failure to provide an electronic catalog (price list) or index page catalog for items awarded will be just cause for DRPT to reject the bid or terminate this contract for default.

2. **BID OPENING:** Bids will be opened publicly on May 24, 2013 at 2:00 p.m. at the DRPT's office at 600 East Main Street, Suite 2102, Richmond, Virginia.

3. **AWARD:** DRPT will make the awards to the lowest responsive and responsible Bidder on the basis **of base price for Vehicle excluding options**. Evaluation will be based on net prices. Unit prices, extensions and grand total must be shown. In case of arithmetic errors, the unit price will govern. If cash discount for prompt payment is offered, it must be clearly shown in the space provided. Discounts for prompt payment will not be considered in making awards. The purchasing office reserves the right to conduct any test it may deem advisable and to make all evaluations. DRPT also reserves the right to reject any or all bids, in whole or in part, to waive informalities and to delete items prior to making the award, whenever it is deemed in the sole opinion of the procuring public body to be in its best interest.

4 **BID ACCEPTANCE PERIOD:** Any bid in response to this solicitation shall be valid for 60 days. At the end of the 60 days the bid may be withdrawn at the written request of the Bidder. If the bid is not withdrawn at that time it remains in effect until an award is made or the solicitation is canceled.

5. **RENEWAL OF CONTRACT:** This contract may be renewed by DRPT for **four successive one-year periods** under the terms and conditions of the original contract. Written notice of DRPT's intention to renew shall be given approximately 90 days prior to the expiration date of each contract period.

6. **CANCELLATION OF CONTRACT:** DRPT reserves the right to cancel and terminate any resulting contract, in part or in whole, without penalty, upon 60 days written notice to the Bidder. In the event the initial contract period is for more than 12 months, the resulting contract may be terminated by either party, without penalty, after the initial 12 months of the contract period upon 60 days written notice to the other party. Any

contract cancellation notice shall not relieve the Bidder of the obligation to deliver and/or perform on all outstanding orders issued prior to the effective date of cancellation.

7. **PRICE ESCALATION/DE-ESCALATION:** Price adjustments may be permitted for changes in the Bidder's cost of materials not to exceed the increase in the following Producer's Price index: **Motor Vehicles Category WPS # 141302**. Price escalation may be permitted only at the end of the contract period and only where verified to the satisfaction of the purchasing office. However, across the board price decreases are subject to implementation at any time and shall be immediately given to DRPT. The Bidder shall give not less than 30 days advance notice of any price increase to the purchasing office. Any approved price changes will be effective only at the beginning of the calendar month following the end of the full 30 day notification period. The Bidder shall document the amount and proposed effective date of any general change in the price of materials. Documentation shall be supplied with the Bidder's request for increase which will: (1) verify that the requested price increase is general in scope and not applicable just to DRPT of Virginia; and (2) verify the amount or percentage of increase which is being passed on to the Bidder by the Bidder's suppliers.

   DRPT will notify the using entities and Bidder in writing of the effective date of any increase which it approves. However, the Bidder shall fill all purchase orders received prior to the effective date of the price adjustment at the old contract prices. **The Bidder is further advised that decreases which affect the cost of materials are required to be communicated immediately to DRPT**.

8. **DELIVERY**: Delivery of goods or performance of services shall be within the number of calendar days stated below after receipt of order (ARO) by the Bidder. DRPT requires the Bidder to deliver within a reasonable time after ARO. If the Bidder does not insert a stated delivery time in the blank below, the Bidder will be deemed to offer delivery in accordance with the DRPT's desired delivery time as stated below:

   DRPT's desired delivered time: calendar days ARO_____**220**___

   BIDDER'S STATED DELIVERY TIME: CALENDAR DAYS ARO_____

9. **BID PRICES:** Bid shall be in the form of a firm unit price for each item during the contract period.

10. **BUILD OUT DATE**: The Bidder shall state the build out date for each model quoted and shall fill all orders placed prior to the build out date. The Bidder is permitted to accept orders after the build out date, until the termination date of the resulting contract. Failure to honor an order placed after the build out date is not a breach of the contract.

    Specify build out date: _____

11. **PRODUCT INFORMATION:** The Bidder shall clearly and specifically identify the product being offered and enclose complete and detailed descriptive literature, catalog cuts and specifications with the bid to enable DRPT to determine if the product offered

meets the requirements of the solicitation. Failure to do so may cause the bid to be considered nonresponsive.

12. **TELEPHONE NUMBERS**: Please list the telephone number, fax number, e-mail, and the name of the responsible persons of your company who may be contacted regarding this contract. List sales and service office, addresses, and phone numbers:

    NAME OF CONTACT PERSON: _____

    TELEPHONE NUMBER: _____

    FAX NO.: _____

    E-MAIL: _____

13. **PAYMENT**: Payment for units purchased under this contract will be in accordance with the Virginia Prompt Payment Act and § 11-62.10 of the Virginia Public Procurement Act. Payment will be made within 30 days following delivery of vehicle meeting specifications, or upon receipt of invoice, whichever occurs later. If the successful Bidder wants to assign payment on this contract to a third party, indicate here:

    Name: _____

    Address: _____

    Other: _____

14. **QUANTITIES:** Quantities set forth in this solicitation are estimates only, and the Bidder shall supply at bid prices actual quantities as ordered, regardless of whether such total quantities are more or less than those shown.

15. **INSTALLATION:** All items must be assembled and set in place, ready for use. All crating and other debris must be removed from the premises.

16. **MAINTENANCE MANUALS:** The Bidder shall provide with each piece of equipment an operations and maintenance manual with wiring diagrams, parts list, and a copy of all warranties.

17. **SUBCONTRACTS:** No portion of the work shall be subcontracted without prior written consent of DRPT. In the event that the Bidder desires to subcontract some part of the work specified herein, the Bidder r shall furnish DRPT with the names, qualifications and experience of their proposed subcontractors. The Bidder shall, however, remain fully liable and responsible for the work to be done by its subcontractor(s) and shall assure compliance with all requirements of the contract.

18. **WARRANTY:** All materials and equipment shall be fully guaranteed against defects in material and workmanship for a period of one-year following date of delivery. Should any defect be noted by the owner, DRPT will notify the Bidder of such defect or non-conformance. Notification will state either (1) that the Bidder shall replace or correct, or (2) the owner does not require replacement or correction, but an equitable adjustment to the contract price will be negotiated. If the Bidder is required to correct or replace, it shall be at no cost to DRPT and shall be subject to all provisions of this clause to the same extent as materials initially delivered. If the Bidder fails or refuses to replace or correct the deficiency, the office issuing the purchase order may have the materials corrected or replaced with similar items and charge the Bidder the costs occasioned thereby or obtain an equitable adjustment in the contract price.

19. **SMALL BUSINESS SUBCONTRACTING PLAN:** If the Bidder on the contract is a DMBE-certified small business, the Bidder shall indicate such in Section A of Attachment F– Small Business Subcontracting Plan. This shall include DMBE-certified women-owned and minority-owned businesses that meet the small business definition and have received the DMBE small-business certification. If the Bidder is not a DMBE certified small business, the Bidder is required to identify the portions of the contract the Bidder plans to subcontract to DMBE-certified small business by completing and returning Section B of Attachment F – Small Business Subcontracting Plan.

20. **PURCHASE VOLUME AND DOLLAR REPORT:** The Bidder shall provide to DRPT on a quarterly basis Attachment D – Purchase Volume and Dollar Report. This report shall reflect the vehicle orders placed against the contract for the respective quarter. The Bidder must remit the report within 15 days after the end of each quarterly reporting period.

21. **ADDITIONAL USERS:** This procurement is being conducted on behalf of all agencies/facilities within the Transportation Secretariat and grantees of DRPT who are listed on Attachment H – Agencies Funded by DRPT. The addition or deletion of authorized users not specifically named in the solicitation shall be made only by written contract modification issued by this agency and upon mutual agreement of the contractor. Such modification shall name the specific entity added or deleted and the effective date. The Bidder shall not honor an order citing the resulting contract unless the ordering entity has been added by written contract modification.

22. **STATE CORPORATION COMMISSION IDENTIFICATION NUMBER:** Pursuant to Code of Virginia, §2.2-4311.2 subsection B, a Bidder organized or authorized to transact business in the Commonwealth pursuant to Title 13.1 or Title 50 is required to include in its bid the identification number issued to it by the State Corporation Commission (SCC). Any Bidder that is not required to be authorized to transact business in the Commonwealth as a foreign business entity under Title 13.1 or Title 50 or as otherwise required by law is required to include in its bid a statement describing why the Bidder is not required to be so authorized. Indicate the above information on the Attachment I - SCC Form provided. Bidder agrees that the process by which compliance with Titles 13.1 and 50 is checked during the solicitation stage (including without limitation the Attachment I - SCC Form) is streamlined and not definitive, and DRPT's

use and acceptance of such form, or its acceptance of the Bidder's statement describing why the Bidder was not legally required to be authorized to transact business in the Commonwealth, shall not be conclusive of the issue and shall not be relied upon by the Bidder as demonstrating compliance.

Page Left Blank Intentionally

ATTACHMENT C

Commonwealth of Virginia
Department of Rail and Public Transportation

Invitation For Bid # 505-13-BB0002

15 Passenger BOC (22 ft. Wide Body) – Ford
12 Ambulatory, Two Wheelchairs & Driver

Specifications

This specification is for 2013 model passenger BOC wheelchair lift vans. The specifications are written to meet the needs of all agencies/facilities within the Transportation Secretariat and grantees of DRPT who are listed on Attachment H – Agencies Funded by DRPT..

The requirements below are for the base vehicle. All components, unless otherwise required by these specifications, shall be the standard or optional equipment specifically advertised and installed by the manufacturer for the vehicle which the Bidder proposes to furnish. The only source of information in determining whether or not the equipment is specifically advertised for the vehicle being offered shall be the manufacturer's published vehicle literature.

Any equipment called for in these specifications which is not listed by the manufacturer as standard or optional for the model being offered is subject to buyer approval.

NOTE: Not all equipment required by this specification is factory installed. Certain items are not available from the manufacturer. It is your responsibility to review the specifications in detail to insure that you have outside sources of supply where necessary and the capability to fulfill the dealer installation for these items.

Vehicles and equipment must conform to the requirements set forth below. Minimum requirements are stated for certain equipment and may be exceeded, subject to buyer approval.

These specifications incorporate where appropriate all provisions of the Americans with Disabilities Act (ADA) Final Rule as stated in 49 C.F.R. pt. 38, Subpart B-Buses, Vans and Systems, pages 45756 through 45761. The minimum specifications for a Ford 15 passenger (including driver) wide body vertical sidewall van with wheelchair lift as follows:

Engine: Ford engine, Gasoline to be a minimum of 6.8 litters

Gross Vehicle Weight (GVW): To be not less than 14,500 lbs.

Wheelbase: Minimum of 158"

Overall Vehicle Length: Minimum of 23'
(Bumper to Bumper)

Overall Exterior Width: Minimum of 96"

Exterior Height: Minimum of 114"

Ground to First Step: Not to exceed 12"

Tread Depth: Minimum of 9"

Step Riser: Maximum of 9"

Interior Width at Seat Level: Minimum 92"

Interior Height Standard Floor: Minimum 80" at center aisle
Usable Floor Length: Minimum of 158" (curbside) and 172" (streetside)

Ambulatory Door and Step Well: Manually operated double outward opening transit door design, with a clear opening of 32" wide by 83" high. The door control shall be a pistol style device with an over-center positive lock design. Door frames to be black extruded anodized aluminum. All attaching hardware to be zinc plated or stainless steel. Ambulatory step well shall be comparable to door width and shall have a minimum of three steps including the floor surface as one step. Step well frame to be powder coated white.

Wheelchair Lift Doors: Double Leaf Design with clear opening of 70" H x 46"W. There will be a 36"H X 14.5" W fixed glass in each door leaf. Single wheelchair lift doors are unacceptable. The doors shall be secured so as not to interfere with the operation of the wheelchair lift. The doors shall be key locked doors. Also, both doors shall have a latching device, i.e. one door will not be held closed by the other door. Both doors to include rods that secure the door at the top and bottom of the frame. Exterior handles shall be included on both doors that pivot the latching rods up and down to secure or release the door. Wheelchair lift doors shall include a top mounted, steel check style, zinc plated door hold open device with 30 lb. springs mounted to the interior of the door and the top of the door frame, to hold doors open (gas struts or shocks are not acceptable).

Rear Door: 32" x 58" with upper and lower windows. The rear door shall include a spring type device to hold door open (gas struts, shocks or t-handle tie-backs are unacceptable).

Vehicle Body: The vehicle shall be of a vertical sidewall design, which provides maximum shoulder room; slanted sidewalls such as a converted raised roof van are unacceptable. The body shall be constructed of steel frame members completely encircling the passenger compartment going from the floor supports on one side, up, across the roof and down to the floor supports on the other side to provide more or less of a roll bar at each body post location. These post assemblies, or roll bars, shall be tied together with longitudinal stringers at the top and bottom lines of the window openings and at least one on the body roof centerline to produce a safety

cage design. The sidewalls and roof panels to be vacuum bagged during manufacture with four pounds of pressure for a minimum of 45 minutes to ensure proper curing and adhesion of all components. Exterior seams shall be constructed in such a manner that they shed water, that is, the leading panel shall be lapped over the following panel and in no case shall the sealing of the panels be dependent on caulking or adhesive tape alone. All exterior joints and seams shall be protected by the application and caulking compound zinc chromate type, butyl/rubber type. Body shall be thoroughly tested and made tight to prevent leakage. After all body components are installed, an aluminum trim secured by body fasteners will be placed over body seams to assure the body is weather proof. Before assembling, all metal parts shall be given a thorough anti-corrosion treatment. Interior surfaces of body panels and post, which are covered by trim materials, shall be given protection against corrosion. The vehicle must comply with the requirements of school bus rollover protection of the Federal Motor Vehicle Safety Standards (FMVSS) #220 as applicable.

Front Axle: To be equipped with heavy-duty axle and springs adequate for vehicle's gross vehicle weight.

Rear Axle: To be equipped with heavy-duty axle and springs adequate for vehicle's gross vehicle weight.

Shock Absorbers: Shall be load rated and of the heaviest duty available, capable of controlling the ride in the vehicle when empty, as well as when loaded to the GVW. They shall be a heavy-duty type to give maximum trouble free life in transit operations.

Suspension: The suspension system shall be load rated and of the heaviest duty available for the GVW of the vehicle. The springs shall be the progressive type to give an acceptable ride under various load conditions. The suspension system may be coil springs on the front and leaf springs on the rear.

Automatic Transmission: Shall be a five speed electronic transmission with overdrive and must be compatible with the engine specified. The transmission shall be equipped with an auxiliary transmission cooler. The transmission shall be equipped with an audible back-up alarm integrated into reverse gear backing lights.

Drive Shaft: Shall be rated capable of transmitting the torque multiplication of the power units to the drive wheels. A safety guard is required to prevent a broken shaft from touching the ground or contacting any brake lines.

Exhaust System: Shall be equipped with corrosion resistant muffler. No flexible tubing shall be used between the engine and the muffler. The exhaust shall exit at the rear of the vehicle.

Fuel Tank: To have the largest capacity furnished by manufacturer, minimum of 55 gallons.

Brakes: Shall be efficiency rated and of the heaviest duty available for the GVW of the vehicle involved. Four-wheel antilock brakes shall be provided. Braking system shall comply with FMVSS-121 or FMVSS-105, as applicable.

Parking Brake: Shall be manually operated working on the rear wheel brakes or the drive shaft. The parking brake shall be capable of holding a fully loaded vehicle on a 15 percent incline; the system shall incorporate a warning light on the instrument panel to indicate to the driver when the brake is on.

Steering: Power steering and equipped with a tilt steering wheel.

Tires and Wheels: Tires shall be the manufacturer's standard LT225/75R 16E tubeless radials. The weight distribution of the vehicle with maximum load shall be evenly distributed and not over load any tires beyond their rated capacity. One matching spare tire and wheel per vehicle is required loaded loose in the vehicle. Wheels shall be manufacturer's standard, painted white.

Electrical Alternator: Shall be a minimum 225 AMP.

Voltage Regulator: Shall be solid-state 12-volt system. Shall be compatible with the alternator.

Battery: Shall be two, maintenance free type, 12 volt batteries with a combined minimum of 1150 CCA.

Wiring: Shall be manufacturer's standard for circuits involved. All wiring shall be run inside the body in a protected area. Any wiring that is exposed to the elements shall be in loom and securely clipped for maximum protection. Clips shall be rubber or plastic coated to prevent them from cutting the wiring insulation. All wiring shall be color-coded and labeled for identification.

Wiring Schematics: The successful vendor shall provide complete **AS BUILT** wiring schematics for al wiring added by the body manufacturer. The schematics shall be made available to the recipient on disk or hard copy.

Parts Manuals: The successful vendor shall provide complete **AS BUILT** parts schematics for all items, including body panels, added by the body manufacturer. The schematics shall be made available to the recipient on disk or hard copy.

Exterior Armored Clearance Lights: Five amber fronts and five reds at rear. All clearance lights shall be armored or recessed.

Interior Access Door: An access door on the front bulkhead or over driver seat to access to the marker lights.

Reflectors: Four reds at rear and two amber at front.

Directional Signals: Shall be in compliance with FMVSS and state statutes. Signals, turn and four-way emergency flashers, shall be wired as an independent circuit at to that of the rear brake light system as to allow for emergency flash circuit to be operable and uninterrupted by a brake application. Control switch shall be self-concealing type mounted on the steering column. Shall

include a hazard-warning feature as required by FMVSS 108. A third or center OEM brake light shall be mounted above the center of the rear window. The additional brake light shall either be flush mounted or armored.

Interior Dome Lights: Shall be ceiling mounted only. There shall be a minimum of six ceiling mounted lights to provide sufficient interior lighting. The opening of the door shall activate all bus body dome lights when the ignition is on or by a separate switch in the driver's compartment. There shall be two shielded step well lights, wired to light when the door opens and shall be mounted on both sides of the step well to provide light on each step tread, plus an area on the ground three feet beyond lower step. The step well lights shall be located to prevent one step from casting a shadow on another step tread. A dome light shall also be provided over the driver's seat area. The driver's seat area dome light shall be a separate circuit from the passenger area dome lights, however switches conveniently placed near the driver's seat shall activate both sets of dome lights.

Lighting: Shall conform to the specifications as outlined in the ADA regulations Subpart B-Buses, Vans and Systems, 38.31 Lighting.

Instruments: Shall be mounted in the instrument panel forward of the driver and in full view while in the driving seated position. The following gauges will be supplied: a) voltmeter b) engine water temperature c) oil pressure d) fuel gauge e) speedometer/odometer. In addition, the driver shall be warned of the following conditions by either a warning light or audible alarm: a) low voltage b) low oil pressure c) headlights on high beam d) parking brake applied e) turn signals activated.

Controls and Switches: They shall be permanently labeled for quick and unmistakable identification; they shall be lighted for nighttime operation (OEM and second stage) in such a way as to prevent glare in the windshield or driver's side windows. Glued identification decals are not acceptable. All bus body controls and switches (i.e. rear heater, body dome lights, bus body air conditioning controls, wheelchair activation switch, etc.) will be included on a control panel mounted to the engine cover (or an approved location) within easy reach of the driver. The control panel will include a wiring quick disconnect (pull apart) feature to aid in engine cover removal. The requirement for a quick disconnect feature is applicable if an approved switch location is utilized.

Heater: Fresh air type front hot water heater, with windshield defroster. This heating system to be located in front of the passenger compartment and to be operated from the driver's position.

Rear Heater: A heater to be a minimum of 40,000 BTU/hour capacities and to be controlled from the driver's position. The rear-heating unit shall be located so as not to adversely affect the wheelchair tie down area or regular ambulatory movement.

There shall be a shut off valve in the heater piping located in an easily accessible to permit the water circulation to the heaters to be shut off area during hot weather.

Windshield Wipers/Washers: To be manufacturer's standard for the vehicle involved. A four-position switch having OFF, INTERMITTENT, LOW and HIGH positions shall control wipers.

Sun Visor: Shall be padded type, fully adjustable, to provide sun glare protection either at the windshield or the driver's side window. Friction device shall hold it securely in either location and in any position during travel over rough road surfaces.

Mirrors: Two Rosco brand exterior rear view mirrors shall be provided, one at the driver's left side, and one opposite on the right side. Mounting brackets to include a driver's side wing mount and a passenger side fender mount quad design. The 2-in-1 mirror head will include a 6.75" wide x 9.75" high upper flat glass and a lower convex measuring 6" wide x 3.5" high. One interior rear view mirror shall be included, factory standard. All mirrors and mirror mountings shall be sufficiently rigid to prevent viewing distortion due to vibration.

Safety Lens: A fresnel lens (minimum 8"x10") shall be centered and installed/glued on the upper or lower window in the rear door.

Exterior Finish: Shall be manufacturer's standard fleet white color of paint, with accent striping to match recipients existing fleet design. No full body paint schemes are required; i.e. all buses will incorporate white as the base color. The paint schemes required would include no more than three stripe colors in addition to the base body white. The stripes shall be painted, not applied as with vinyl graphic material. The paint used for the stripes shall be DuPont Clear Coat. The stripes shall include a clear coat finish. The body metal shall be properly treated before final color paint to prevent rusting or corrosion. A can or bottle of exterior touch up paint shall be provided. The transit system's name shall be reproduced with direct contact 3M seven-year vinyl or equivalent on each side of the vehicle and approved by the recipient. Some recipients will require logo reproduction on the exterior of the vehicle. The price for this graphic work is to be included in the price. If end user paint schemes are changed or modified during the life of this contract, vendor will be allowed to re-negotiate the cost to paint an individual agency's equipment.

Interior Colors: Shall be chosen from the manufacturer's standard colors.

Floor Deck: The seamless finished sub floor is ¾" thick Fiberglass Reinforced Plywood (FRP). The inner core of the FRP panels made of Northern Fir B/C plywood that has been plugged and filled. This material to be sandwiched between 17 oz. woven rope fiberglass matt impregnated with fiberglass resin. The face side to have 20 mil gel coat finish and the back side to be covered with co-extruded melinex film.

The FRP panels are installed on top of the steel sub frame with grade five bolts. Construction adhesive utilized along the top of all floor members that intersect the floor decking material. A minimum of six bolts per cross member.

Floor Covering: Shall be RCA Rubber Company (RCA) transit quality rubber 1/8" thick, smooth under passenger seats and in the driver's area. Aisle covering shall be RCA transit quality 3/16" thick ribbed. Step treads shall have a white edge or nosing to pronounce the presence of

the step. Vestibule covering shall be mitered to match the ribs in the aisle strip to facilitate clearing. There shall be no lip or nosing overhang; the step tread flange shall be flush with the vertical riser to eliminate any tripping condition. Carpeted floors are unacceptable for this application. The floor covering shall be color keyed providing a visual contrast to the interior. The minimum choices for the floor color shall include black, tan, charcoal and blue. A white standee line shall be included at the forward area of the passenger compartment. The entry steps to include a white step nosing covering the leading edge of the step riser.

Combination Roof Ventilator/Emergency Exit: A non-closing, static exhaust vent shall be included on the roof hatch. The combination ventilator-emergency escape hatch, with the dimensions of 24" x 24", shall be installed in the vehicle roof. When the hatch is open and the vehicle is in a forward motion, fresh air enters inside the vehicle.

Windows: Transit type top "T" slider windows with tempered safety glass, 31 percent tinted shall be installed in each side of the passenger compartment. Each window shall be a minimum of 24" wide by 34" high. Each window shall include a ventilation section providing ventilation for the passengers. Windows on each side of the bus shall function as an emergency exit in accordance with FMVSS #217. A curbside transition window to be located in front of the entry door. Minimum height to be 40" with total square inches of viewing area to be a minimum of 425.

Interior: All interior panels, materials and treatments shall be flame retardant. The headliner, side-walls and cab liner shall be fiberglass panels with a gel coat finish to facilitate ease of cleaning.

Undercoating: The underbody, including wheel housings, shall be undercoated except those areas directly above the chassis exhaust pipe, muffler and tailpipe. Proper care shall be taken to prevent any coating from being deposited on grease fittings, moving parts, brake hoses, and drive shaft. Undercoating to meet MIL Spec C-62218A.

Mud Deflectors: Mud flaps shall be provided mounted to both front and rear wheel wells.

Seating: To have seating capacity of 15 adults including the driver and two passengers in wheelchairs. The stationary seats for 12 passengers shall be Freedman Seating Company Mid Height, Feather Weight Transit Line.

Seat belts shall be provided and color-coded to allow one to differentiate between which seat belt goes to which seat. Please refer to attached floor plan. Minimum hip to knee spacing will be 30" curbside and 33" roadside. All aisle side seats to include padded vandal resistant seat back grab handles. All seats and restraints must comply with current FMVSS standards, including 201, 202, 207, 208, 209, 210, 214, 225 and 302.

All seating to be secured in a 1 5/8" wide unistrut channel seat track. A 3 ½" wide 14 gauge steel plate is welded to the steel sub frame. The unistrut channel is then welded to this plate. Wall track to be unistrut and monobolted every 6" to a 14 gauge steel tube that is part of the interior side wall structure.

Seat Covering: Standard cloth or vinyl seat coverings (or a combination of the two) shall be provided. Minimum color selections should include gray, blue, maroon and tan or brown. Pricing for level three seat covering to be included in bid price.

Floor Plan: All Bidders shall submit a floor plan drawn specifically for this procurement. The floor plan shall be drawn to scale and clearly indicate hip to knee dimensions. Offers submitted without a floor plan as described above will be deemed non-responsive.

Driver's Seat: Driver's seat to be a Freedman Shield #71234 high back recliner with right side Shield arm rest and adjustable lumbar. Pricing for level three seat covering to be included. The driver's seat shall also have a fore and aft adjustment.

Bumpers: Shall be provided at both front and rear of the vehicle. They shall wrap around the body sufficiently to give protection against impact at the body corners. The front bumper shall be supplied by the chassis OEM and include a chrome finish. The rear bumper to be wrapped around style constructed of 10 gauge steel, powder coated black. The bumper brackets are to be bolted to the chassis frame.

Rear bumper to include an anti-ride feature. The anti-ride device shall include a built-in step at the rear door. The step shall include a non-slip, textured surface.

Towing Devices: There shall be two attachment points at the rear. The towing devices shall be adequate in design and construction to permit towing the vehicle without distortion or failure.

Air Conditioning: Air conditioning shall be Trans Air model TA-712 Super or approved equal.

The air conditioning system shall consist of two completely independent air conditioning systems (minimum of 55,000 BTU). The drivers area air conditioning system shall be the OEM supplied air conditioning system and shall consist of the OEM supplied in-dash evaporator; the radiator mounted condenser, and compressor. The passenger air conditioning system shall consist of the following.

Compressor: A second compressor shall be installed on the vehicle engine it is specific to the passenger area air conditioning system. The compressor shall be nominal 10 cubic inch displacement.

Evaporator: Trans Air model TA-71 or approved equal.

Condenser: Trans Air model SMC2S approved equal.

Fast Idle / Interlock: Intermotive or In-Power Advanced Fast Idle / Interlock System. The vehicle shall include a voltage monitor/engine idler. The device shall activate automatically when the vehicle is in a discharge situation, the transmission is in Park and the parking brake is applied. The device shall also include a manual activation switch. The device shall automatically deactivate when the parking brake is released and the vehicle is put in gear.

Safety Equipment: The following safety equipment shall be mounted in a location within the vehicle (approved by DRPT) so as not to interfere with the driver or passenger.

16 unit Virginia Bus First Aid kit, to include the following:

- (1) AN-101: 1”x3” Fabric bandages, 16/bx
- (2) AN-146: 1”x3” Adhesive plastic bandages, 16/bx
- (1) AN-205: 32 sq. in. Absorbent gauze compress, 1/bx
- (1) AN-266: 3” Compress bandage, off center, 2/bx
- (1) AN-5071: Triangular sling/bandage, 1/bx
- (1) AN-206: 3”x3” Gauze dressing pads, 4/bx
- (1) AN-337: Antiseptic cleansing wipes (sting free), 10/bx
- (1) A-338: Povidone-iodine infection control wipes, 10/bx
- (1) AN-5111: 1/2”x2.5 yd. Adhesive tape, 2/bx
- (1) AN-5112: Exam quality gloves, 2pr/bx
- (1) AN-404: Burn relief packs, 6/bx
- (1) B-503: 4”x5” Instant cold compress, 1/bx
- (1) B-717: 2 Sterile eye pads, 1 oz. eye wash, 1/2”x5 yd. first aid tape roll, 1/bx
- (1) BK-009-40: 40 pg. First Aid Guide booklet

Fire extinguisher, 5 lb. ABC type
Warning triangles, reflective type - three units
OSHA approved Body Fluid Clean Up Kit

Radio: To be an AM/FM/CD stereo radio with a digital clock feature and a minimum of four speakers.

Wheelchair Lift: A wheelchair lift shall be included on the curbside rear of the bus at the wheelchair lift door. A Braun Century Model NCL919FIB-2 or approved equal, shall be installed and conform to the specifications as outlined in the ADA regulations Subpart B-Buses, Vans and Systems, 38.23 Mobility aid accessibility. (b) Vehicle lift - pages 45757 - 45758. The lift assembly shall safely accommodate a static load of 800 lbs. All power units, operating joints, linkage and mounting points to the body shall be certified by the manufacture as being adequate for the minimum load requirement. Lift shall be equipped with a manual over-ride to permit lift to be raised or lowered manually in event of power failure or emergency. A passenger handrail shall be provided on both sides of lift platform. A complete set of operating instructions, schematics and a trouble-shooting guide shall be included with each lift.

Securement Devices: There shall be two wheelchair tie down spaces (reference seating diagram). All floor-mounted attachments shall be flush mounted, and must meet 30/20 Impact Test Criteria per SAE J2249 Standard. The wheelchair securement devices shall conform to the specifications as outlined in the ADA regulations Subpart B-Buses, Vans and Systems, 38.23 Mobility aid accessibility. (d) Securement devices - page 45759. Acceptable kits are Sure-Lok Series AL727S-4C including AL700842 lap belt, FE2004732 shoulder belt and Sure-Lok Titan retractors or approved equal.

A storage container shall be provided for each securement station to allow clean storage of the system straps and belts when not in use.

A hand held web cutter shall be provided for each wheelchair position. (Sure-Lok part number 8705 or Q'Straint part number Q5-7590)

Stanchion Bar: Stanchion and grab bars shall be of corrosion steel or equivalent, a minimum of 1-1/4" in diameter and padded. Padding shall be permanently bonded to stanchion and grab bars. Padded stanchion bar shall be installed at side entrance door. Stanchion shall be mounted, floor to ceiling in structural members. Location to be approved by DRPT. Anti-vandal grab shall be located on top of each forwarded facing aisle seat except front passenger and driver seats and seats at rear door. A 20" passenger assist grab bar shall be securely mounted on both sides of the entrance door (dual door location), to provide additional support while boarding and alighting. Bar to be a minimum of 1" in diameter. Location to be approved by DRPT. There shall also be floor to ceiling stanchions on either side of the aisle at the entry to the passenger compartment. Both stanchions shall include a horizontal stanchion that attaches to the sidewall. In addition, the curbside stanchion shall include a modesty panel separating the first row of curbside seats from the step well.

Overhead grab bars as required by ADA or when selected as an option, must be one piece from front to back.

Doors, Steps and Thresholds: Shall conform to the specifications as outlined in the ADA regulations Subpart B-Buses, Vans and Systems, 38.25 Doors, steps and thresholds.

Priority Seating Signs: Shall conform to the specifications as outlined in the ADA regulations Subpart B-Buses, Vans and Systems, 38.27 Priority seating signs.

Interior Circulation, Handrails and Stanchions: Shall conform to the specifications as outlined in the ADA regulations Subpart B-Buses, Vans and Systems, 38.29 Interior circulation, handrails and stanchions.

Front End Alignment: Final front-end alignment before delivery. Printed before and after readings to be included.

License Brackets: Vehicle shall be preconfigured for front and rear license plates or equipped with front and rear license plate brackets.

OEM Approved Converter: All Bidders must certify that they strictly conform to all requirements set forth by Ford Motor Company for final stage converters. Proof of participation in the Ford Transit Bus Qualified Vehicle Modifier Program to accompany bid.

International Organization for Standardization 9001:2008: All Bidders will be required to submit an ISO 9001:2008 supplier's certification for the bus body manufacturer. Proof of certification shall accompany bid. Bids received without certification will be deemed non-

responsive. ISO 9001:2008 has been implemented to insure suppliers conform to strict standards regarding the manufacturer's Quality Management System. The manufacturer's ISO 9001:2008 certification insures compliance with the customer's quality requirements and applicable regulatory requirements while enhancing customer satisfaction and achieving continual improvement of its performance in pursuit of these objectives.

Maintenance Provisions: A description of how and by whom warranty service can be provided is to be included. The vendor shall be responsible for all warranties associated with the vehicle. The vendor shall act as the first source for performing warranty work. This must cover both mechanical and body work. The manufacturer's warranty covering parts, materials and workmanship shall apply for a minimum period of 12 months of 12,000 miles, whichever occurs first, and this warranty shall include repair and replacement of defective parts and labor. The structural body warranty to be a minimum of five years or 75,000 miles, whichever occurs first. The successful vendor shall be required to offer a toll free number to all recipients for warranty inquiries, parts orders and service related questions. The vendor shall have personnel available to answer warranty, parts and service inquiries Monday through Friday, 8:00 AM to 5:00 PM, except during holidays recognized by the Commonwealth of Virginia. All Bidders must offer proof of both chassis and body warranty (including bus body, air conditioning and wheelchair lifts) service points within the Commonwealth of Virginia. All Bidders shall be required to submit documentation providing the names of the vendors. Successful vendor shall be required to maintain service facilities in Central / Southwest Virginia, Tidewater and Northern Virginia.

The vehicle to be furnished shall conform to all applicable Federal and Motor Vehicle Safety Standards and all equipment shall conform to Title 46.1, Chapter 4, and Article 9 of the *Code of Virginia* and shall include a valid State Inspection Sticker. Chassis to be a standard proven model of manufacturer's latest current production and include all standard equipment as advertised with additional optional equipment as outlined above. All components, unless otherwise required by these specifications, shall be the standard or optional equipment specifically advertised and installed by the manufacturer including any additional warranties.

Prior to delivery the vendor must perform new vehicle service preparation. The vendor shall provide DRPT staff five working days notices prior to delivery to inspect the vehicles. The vehicle shall be in acceptable condition upon delivery and will be accepted only by an authorized person designated by the agency. Delivery shall be during normal business hours, 8 AM - 5 PM, Monday through Friday. Payment will not be initiated until the agency is assured that the vehicle has been delivered in an acceptable condition and everything is working properly. All vehicles shall have 30-day tags on delivery to recipient.

Dealer Requirements: All Bidders are required to be licensed Virginia Motor Vehicle Dealers as established in Title 46.2 of the *Code of Virginia*.. Requirements include but are not limited to a minimum of 250 sq. ft. of office space in a permanent enclosed building, not used as a residence, devoted exclusively to the dealership. Dealership must also include contiguous space designated for the exclusive use of the dealer adequate to display at least 10 vehicles. The facility must include a desk, chairs, filing space, a working telephone listed in the name of the dealership and working utilities. **Dealers shall include copy of certification with bid.**

Federal Conditions of Manufacturer/Vendor: The attached federal conditions of Manufacturer/Vendor must be completed with bid package.

SEATING CHART

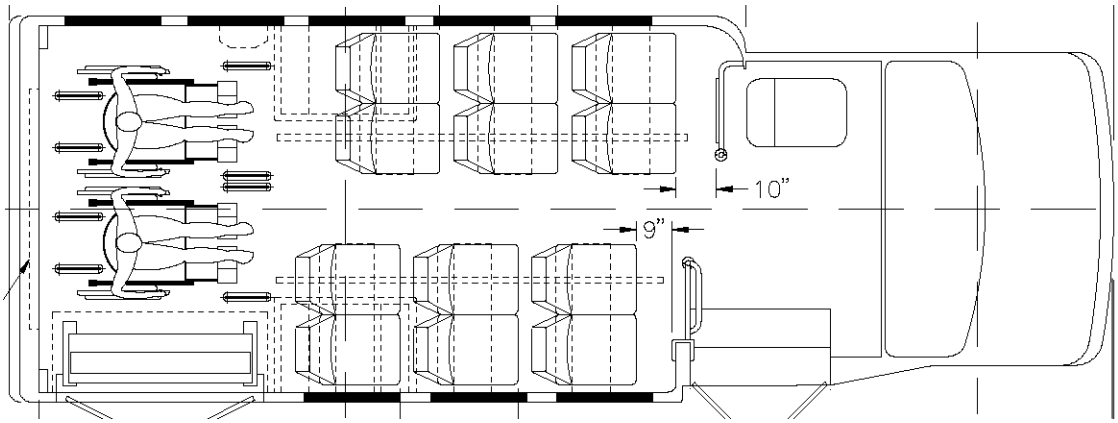

NOTE: Rear door to be provided as specified

Page Left Blank Intentionally

ATTACHMENT D

Purchase Volume and Dollar Report

Contractor Name	
Report Preparer Name	
Contact E-mail	
Contact Phone	
Report Start Date	
Report End Date	

Periods	Report Due Date
January 1 - March 31	April 15
April 1 - June 30	July 15
July 1 - September 30	October 15
October 1 - December 31	January 15

Instructions:

1. Enter your company name, contact info, and the dates covered by this report above.
2. Fill in all the cells for each line-item purchased. Follow the example shown below.
3. Please ensure correct spelling of the Grantee and Division/Department.

Calculated total sales amount for this reporting period: **$0.00**

Line #	DRPT Contract Number	Grantee Purchase Order Number	Grantee Purchase Order Date	Date Purchase Order Received	Date Dealer Placed Order	Order Confirmation Date	Estimated Delivery Date	Grantee Name (ensure correct spelling)	Division/Department (ensure correct spelling)	eVA Order? (Yes/No)	Spreadsheet Received? (Yes/No)	Description of Vehicle	Quantity Ordered	Vehicle Unit Price	Total Price for all Vehicles w/ Options	
1	MA E194-403	POBE194640	02/28/07	03/01/07	03/03/07	03/08/07	06/01/07	Greene County Transit	Purchasing	Y	Y	3/4 Ton Regular Cab 4x4	1	25,987.00	25,987.00	EXAMPLE
													-	$ -	$ -	

Page Left Blank Intentionally

ATTACHMENT E

BASE PRICE – 2013 DRPT FORD Medium Duty Bid

$ _____

OPTIONS – 2013 DRPT FORD Gas BOC Bid

Options will not be included in determining low Bidder for award.

	OPTION	PRICE
1	Add 34" two passenger foldaway vertical flip seat (price per seat) in the wheelchair securement area (if available on selected model)	
2	Two strobe lights, one each roof mounted at front and rear caps. Strobes to be Specialty Model 205 mini strobe (2.25" high) or equal.	
3	Q-Straint QRT Max wheelchair securement systems vs std, each.	
4	USSC G2E Driver Seat	
5	Front help bumper	
6	Rear help bumper	
7	Ground plane installed in roof with interior door and cable conduit with pull wire routed to cab area. Please provide per unit price.	
8	Stainless steel wheel inserts	
9	Folding arm rests per seat	
10	Adjustable head rests per seat	
11	ABS seat backs	
12	Front roller type destination sign (25 stations)	
13	Side roller type destination sign (25 stations)	
14	Destination sign lettering (per placement, per sign)	
15	Driver's locking document box – cabinet style with key lock on door	
16	Diamond Model XV fare-box with two vaults	
17	Ford Shop manuals	
18	Freedman integrated child restraint seats - single child restraint seat with companion seat	
19	Freedman integrated child restraint seats – dual child restraint seats	

20	Level four seat covering – per seat	
21	Level five seat covering – per seat	
22	Level six seat covering – per seat Level seven seat covering – per seat	
23	Reclining passenger seats – each	
24	30” x 42” interior baggage rack	
25	Spare tire carrier	
26	Delete rear door (credit)	
27	Overhead standee rail (one)(standard on 15 and 19 BOC)	
28	Overhead standee rails (two)	
29	Overhead interior parcel bins	
30	Bullet style reading lights – each	
31	Reflexite reflective tape package (egress windows and body outline)	
32	Alarm and warning light signaling lift door open	
33	Sportworks DL2 two position bike rack painted steel	
34	Sportworks DL2 two position bike rack stainless steel	
35	LED clearance lights vs. standard	
36	Luminator front and side destination signs(provide model number)	
37	Twin Vision front and side electronic destination signs (provide model number)	
38	Next stop signal system	
39	Child “Checkmate” system	
40	Sportworks mounting hardware (exclusive of rack, installed)	
41	REI three camera video surveillance system	
42	REI four camera video surveillance system	
43	REI five camera video surveillance system	
44	Altro safety vinyl flooring	
45	Altro flooring on side wall to seat track	
46	Echovision obstacle detection system rear mounted or equal	
47	Ricon KlearVue ADA lift	
48	Braun Vista ADA lift	
49	Add standard ambulatory seat, per seat (to match seats in vehicle)	
50	Add 34” two passenger notchback foldaway vertical flip seat in the wheelchair securement area	
51	Multiple buses keyed alike (each)	
52	Driver’s coat hook in radius behind driver	
53	6” x 16” interior mirror	
54	Vandal resistant seat back grab handles (each) for wall side seats	
55	Wheelchair track full width of bus vs. std	
56	Exterior step-well light	

57	Fare box floor plate and power supply	
58	GFI Odyssey fare box (specify model number)	
59	Provide jack and handle	
60	Wheelchair lift dress cover	
61	Gray interior gel coat walls vs. std	
62	36” x 36” windows vs. std	
63	Fuel sending unit access panel in floor	
64	Freedman USR retractable seat belts for each passenger	
65	Vertical seat stitching per seat	
66	Engine hour meter	
67	Delete accessibility package	
68	Full body paint vs. std white	
69	Freedman Citi seats vs. std	
70	Mentor BBX and Road Ranger install	
71	Spare wheel and tire to match Original Equipment Manufacturer	
72	Yellow standee line and step nosing in lieu of standard	
73	Yellow seat back grab handles in lieu of standard	
74	Yellow stanchions and standee rails in lieu of standard	
75	Paratransit flat floor for three or more wheelchair positions	
76	Secure Connect wheelchair securements vs. standard	
77	LED brake, tail and reverse lights	
78	LED upper-mounted light	
79	LED turn signals	
80	Full Bus Wrap including windows	
81	Full Bus Wrap excluding windows	
82	Driver’s side aluminum running board	
83	LED interior lighting	
84	Florescent interior lighting	
85	Angel Trax three camera video surveillance system	
86	Angel Trax four camera video surveillance system	
87	Angel Trax five camera video surveillance system	
88	Wheels shall have matching wheel covers.	
89	Exterior scheme applied with bus wrap material	
90	Overdrive Controller (specify model)	
91	Fixed pane transit windows	
92	Tarabus Transit non slip flooring. 2.25 mm thickness; includes silicon carbide for anti slip properties	
93	Installation of Zonar Electronic Vehicle Inspection Report System (EVIR)	
94	Installation of Zonar V2J: High-Definition GPS & Vehicle Diagnostics system	

95	Propane-Powered FTA Bus Tested Conversion – Bi-Fuel (Please provide system specifications and Altoona Test Executive Summary)	
96	Propane-Powered FTA Bus Tested Conversion – Dedicated (Please provide system specifications and Altoona Test Executive Summary)	
97	Ford 91 G Gaseous Fuels Option for CNG/LPG Capable Engines	
98	CNG Three Tank Conversion (Please provide system specifications and Altoona Test Executive Summary)	
99	CNG Four Tank Conversion (Please provide system specifications and Altoona Test Executive Summary)	

ATTACHMENT F

DEPARTMENT OF MINORITY BUSINESS ENTERPRISE (DMBE)
SMALL BUSINESS SUBCONTRACTING PLAN

All small businesses must be certified by the Commonwealth of Virginia, Department of Minority Business Enterprise (DMBE) to participate in the SWAM program. Certification applications are available through DMBE online at www.dmbe.virginia.gov (Customer Service).

Definitions

"Small business" means a business, independently owned and controlled by one or more individuals who are U.S. citizens or legal resident aliens, and together with affiliates, has 250 or fewer employees, or average annual gross receipts of $10 million or less averaged over the previous three years. One or more of the individual owners shall control both the management and daily business operations of the small business.
(*Code of Virginia*, § 2.2-4310)

"Women-owned business" means a business that is at least 51% owned by one or more women who are U.S. citizens or legal resident aliens, or in the case of a corporation, partnership, or limited liability company or other entity, at least 51% of the equity ownership interest is owned by one or more women who are U.S. citizens or legal resident aliens, and both the management and daily business operations are controlled by one or more women.
(*Code of Virginia*, § 2.2-4310)

"Minority-owned business" means a business that is at least 51% owned by one or more minority individuals who are U.S. citizens or legal resident aliens, or in the case of a corporation, partnership, or limited liability company or other entity, at least 51% of the equity ownership interest in the corporation, partnership, or limited liability company or other entity is owned by one or more minority individuals who are U.S. citizens or legal resident aliens, and both the management and daily business operations are controlled by one or more minority individuals.
(*Code of Virginia*, § 2.2-4310)

Bidder Name: _____

Preparer Name: _____ Date: _____

Instructions

A. If the Bidder is certified by the DMBE as a small business, complete only Section A of this form. This shall include DMBE-certified women-owned and minority-owned businesses when they have received DMBE small business certification.

B. If the Bidder is not a DMBE-certified small business, complete Section B of this form. For the bid to be considered and the bidder to be declared responsive, the bidder shall identify the portions of the contract that will be subcontracted to DMBE-certified small business in Section B.

Section A

If the Bidder is certified by DMBE, the Bidder is certified as a (**check only one below**):

_____ Small Business

_____ Small and Women-owned Business

_____ Small and Minority-owned Business

Certification number:_____ Certification date:_____

Section B

Populate the table below to show the firm's plans for utilization of DMBE-certified small businesses in the performance of this contract. This shall include DMBE-certified women-owned and minority-owned businesses that meet the small business definition and have received the DMBE small business certification. Include plans to utilize small businesses as part of joint ventures, partnerships, subcontractors, suppliers, etc.

B. Plans for Utilization of DMBE-Certified Small Businesses for this Procurement

Small Business Name & Address **DMBE Certificate #**	**Status if Small Business is also: Women (W), Minority (M)**	**Contact Person, Telephone & Email**	**Type of Goods and/or Services**	**Planned Contract Involvement**	**Planned Annual Contract Dollar Expenditure Amount**
Totals $					

Page Left Blank Intentionally

ATTACHMENT G

VENDOR DATA SHEET

Note: The following information is required as part of the Bidder's response to this solicitation. Failure to complete and provide this sheet may result in finding the bid nonresponsive. (In the case of a two-step IFB, it may cause the proposal portion to be determined to be not acceptable.)

1. **Qualification**: The vendor must have the capability and capacity in all respects to satisfy fully all of the contractual requirements.

2. **Vendor's Primary Contact**:

   Name: _____ Phone: _____

3. **Years in Business**: Indicate the length of time the Bidder has been in business providing this type of good or service:

   _____ Years _____ Months

4. **Vendor Information**: VA Vendor ID or DUNS Number: _____

5. Indicate below a listing of at least four current or recent accounts, either commercial or governmental, that the Bidder is servicing, has serviced, or has provided similar goods. Include the length of service and the name, address, and telephone number of the point of contact.

   A. Company:_____ Contact: _____

   Phone:(_____)_____ Fax: (_____)_____

   Project:_____

   Dates of Service: _____$ Value: _____

   B. Company:_____ Contact: _____

   Phone:(_____)_____ Fax: (_____)_____

   Project:_____

   Dates of Service: _____$ Value: _____

   C. Company:_____ Contact: _____

   Phone:(_____)_____ Fax: (_____)_____

   Project:_____

   Dates of Service: _____$ Value: _____

   D. Company:_____ Contact: _____

   Phone:(_____)_____ Fax: (_____)_____

   Project:_____

   Dates of Service: _____$ Value: _____

I certify the accuracy of this information.

Signed: _____Title: _____ Date: _____

Page Left Blank Intentionally

ATTACHMENT H

Agencies Funded by DRPT

A Grace Place Adult Care Center
Accomack Northampton TDC
Adult Care Service
Adult Day Care of Martinsville and Henry Counties
Alexandria Transit
American Emergency Vehicles
American Red Cross
Appalachian Agency for Senior Citizens
ARC of Greater Prince William
Arc of the Virginia Peninsula
Arlington County
Bay Aging, Inc.
Bedford County
Beth Shalom Home
Blacksburg Transit
Blue Ridge Opportunity Services
Bon Secours Senior Health
Bristol Virginia Transit
Buchanan County Transportation
CAPUP
Central Shenandoah Planning District Commission
Central Virginia Area Agency on Aging, Inc.
Chesapeake Service Systems
Chesterfield Community Services Board
Chesterfield County
City of Alexandria
City of Bristol, Tennessee
City of Charlottesville
City of Danville
City of Fairfax
City of Falls Church
City of Fredericksburg
City of Harrisonburg
City of Kingsport
City of Lynchburg
City of Martinsville
City of Radford
City of Richmond
City of Staunton
City of Virginia Beach
City of Williamsburg
Community Association for Rural Transportation, Inc.
Community Transportation Association of Virginia
Crater District Area Agency On Aging /FGP
Crater Planning District Commission
Crossroads Community Services
Cumberland County
Daily Planet Health Care for Homeless
Danville City Parks and Recreation Department
Danville-Pittsylvania Community Services
Dickenson County Transportation
District III Public Transit
Dulles Area Transportation Association
Eastern Shore Community Services Board
ECHO.INC
ElderHomes Corporation
ESAAA/CAA
Essex County
Fairfax County
Farmville Area Bus
Friendship Industries, Inc.
George Washington Regional Commission
Giles Health & Family Center
Gloucester County
Goochland Fellowship and Family Service
Goodwill Industries of the Valleys
Grafton School, Inc.
Greater Lynchburg Transit Company
Greater Richmond Transit Company
Greater Roanoke Transit Company
Greene County
Greensville Adult Activity Services
Hampton Roads Planning District Commission
Hampton-Newport News Community Services Board
Hanover Community Services
Henrico Area MH/MR Services
Historic Triangle Senior Center
Hope House Foundation
Hopewell Redevelopment and Housing Authority
Intelligent Transportation Society of Virginia
James City County
JAUNT, Inc.
Jewish Community Center of Northern Virginia
Junction Center for Independent Living
Lake Country Area Agency on Aging
Loudoun County
Lynchburg Community Action Group, Inc.
Metropolitan Washington Airports Authority
Metropolitan Washington Council of Governments
Middle Peninsula Planning District Commission
Middle Peninsula-Northern Neck CSB
Montgomery County
Mount Rogers Community Services Board
Mountain Empire Older Citizens
New River Valley Community Services Board
New River Valley Planning District Commission
New River Valley Senior Services - Pulaski Area Transit
Northern Neck Planning District Commission
Northern Shenandoah Valley Regional Commission
Northern Virginia Transportation Commission
Northwestern Community Services Board
NuRide, Inc.

Northern Virginia Regional Commission
PARC Workshop, Inc.
Peninsula Agency on Aging
Petersburg Area Transit
Piedmont Community Services Board
Pleasant View, Inc.
Portco, Inc.
Potomac and Rappahannock Transportation Commission
Prince William County
Quin Rivers Agency for Community Action, Inc.
Rappahannock Area Agency on Aging
Rappahannock Area Community Services Board
Rappahannock-Rapidan Area Agency on Aging
Rappahannock-Rapidan Community Services Board
Rappahannock-Rapidan Planning District Commission
Resort Area Transportation Management Association
Richmond Area ARC
Richmond Community Action Program
Richmond Planning District Commission
Richmond Redevelopment and Housing Authority
Richmond Residential Services
Ridefinders
Roanoke County
Roanoke Valley-Alleghany Regional Commission
Rockbridge Area Community Services Board
Rockbridge Area Occupational Center, Inc.
Rockbridge Area Transportation System, Inc.
Rockbridge County
Rockingham County
Russell County Public Transportation
Senior Services of Southeastern Virginia
Shenandoah Area Agency on Aging, Inc.
Shen-Paco Industries, Inc.
Southern Area Agency on Aging
Southside Community Services Board
St. Joseph's Villa
Stepping Stones, Inc.
STEPS, Inc.
Sussex-Greensville-Emporia Adult Activity Services
Tazewell County
The Arc of Central Virginia
The Arc of Greater Prince William
The Arc of Harrisonburg/Rockingham
Thomas Jefferson Planning District Commission
Town of Altavista
Town of Ashland
Town of Blackstone
Town of Bluefield - Graham Transit
Town of Chincoteague
Town of Haymarket
Town of Herndon
Town of Kenbridge
Town of Orange
Town of Purcellville
Town of South Hill
Town of Victoria
Town of Warrenton
Town of West Point
Transportation District Commission of Hampton Road
Tysons Transportation Association, Inc.
UHSTS, Inc. - RADAR
Valley Program for Aging Services, Inc.
Vector Industries, Inc.
Virginia Port Authority
Virginia Rail Policy Institute
Virginia Regional Transportation Association
Virginia Transit Association
Virginias Region 2000 Local Government Council
West Piedmont Planning District Commission
Western Tidewater Community Services Board
Williamsburg Area Transit Authority
Winchester Transit
Wise County
Washington Metropolitan Area Transit Authority
Washington Metropolitan Area Transit Commission

ATTACHMENT I

State Corporation Commission Form

<u>Virginia State Corporation Commission (SCC) registration information</u>. The Bidder:

☐ is a corporation or other business entity with the following SCC identification number: _____ **-OR-**

☐ is not a corporation, limited liability company, limited partnership, registered limited liability partnership, or business trust **-OR-**

☐ is an out-of-state business entity that does not regularly and continuously maintain as part of its ordinary and customary business any employees, agents, offices, facilities, or inventories in Virginia (not counting any employees or agents in Virginia who merely solicit orders that require acceptance outside Virginia before they become contracts, and not counting any incidental presence of the Bidder in Virginia that is needed in order to assemble, maintain, and repair goods in accordance with the contracts by which such goods were sold and shipped into Virginia from Bidder's out-of-state location) **-OR-**

☐ is an out-of-state business entity that is including with this bid an opinion of legal counsel which accurately and completely discloses the undersigned Bidder's current contacts with Virginia and describes why those contacts do not constitute the transaction of business in Virginia within the meaning of § 13.1-757 or other similar provisions in Titles 13.1 or 50 of the Code of Virginia.

****NOTE**** >> Check the following box if you have not completed any of the foregoing options but currently have pending before the SCC an application for authority to transact business in the Commonwealth of Virginia and wish to be considered for a waiver to allow you to submit the SCC identification number after the due date for bids (DRPT reserves the right to determine in its sole discretion whether to allow such waiver): ☐

Page Left Blank Intentionally

ATTACHMENT J

FEDERAL CONDITIONS OF MANUFACTURER/VENDOR

1. BUY AMERICA REQUIREMENTS
49 U.S.C. 5323(j)
49 C.F.R. pt. 661

The Buy America regulation, at 49 C.F.R. pt. 661.13, requires notification of the Buy America requirements in Federal Transit Administration (FTA)-funded contracts, but does not specify the language to be used. The following language has been developed by FTA.

Buy America - The contractor agrees to comply with 49 U.S.C. § 5323(j) and 49 C.F.R. pt. 661, which provide that Federal funds may not be obligated unless steel, iron, and manufactured products used in FTA-funded projects are produced in the United States, unless a waiver has been granted by FTA or the product is subject to a general waiver. General waivers are listed in 49 C.F.R. pt. 661.7, and include final assembly in the United States for 15 passenger vans and 15 passenger wagons produced by Chrysler Corporation, and microcomputer equipment and software. Separate requirements for rolling stock are set out at 49 U.S.C. § 5323(j)(2)(C) and 49 C.F.R. pt. 661.11. Rolling stock must be assembled in the United States and have a 60 percent domestic content.

A Bidder must submit to the FTA recipient the appropriate Buy America certification (below) with all bids on FTA-funded contracts, except those subject to a general waiver. Bids that are not accompanied by a completed Buy America certification must be rejected as nonresponsive. This requirement does not apply to lower tier subcontractors.

The Manufacturer must submit with the proposal the proposed component and sub-components parts of the vehicle identified by manufacturer, country of origin, and cost; and the proposed location of the final activity point for the buses, including a description of the activities that will take place at the final assembly point and cost of final assembly.

Certification requirement for procurement of steel, iron, or manufactured products.

Certificate of Compliance with 49 U.S.C. § 5323(j)(1)

The Bidder hereby certifies that it will meet the requirements of 49 U.S.C. § 5323(j)(1) and the applicable regulations in 49 C.F.R. pt. 661.5.

Date _____

Signature _____

Company Name _____

Title _____

Certification requirement for procurement of steel, iron, or manufactured products.

Certificate of Non-Compliance *with 49 U.S.C. § 5323(j)(1)*

The Bidder hereby certifies that it cannot comply with the requirements of 49 U.S.C. § 5323(j)(1) and 49 C.F.R. pt. 661.5, but it may qualify for an exception pursuant to 49 U.S.C. §§ 5323(j)(2)(A), 5323(j)(2)(B), or 5323(j)(2)(D), and 49 C.F.R. pt. 661.7.

Date _____

Signature _____

Company Name _____

Title _____

Certification requirement for procurement of buses, other rolling stock and associated equipment.

Certificate of Compliance *with 49 U.S.C. § 5323(j)(2)(C).*

The Bidder hereby certifies that it will comply with the requirements of 49 U.S.C. § 5323(j)(2)(C) and the regulations at 49 C.F.R. pt. 661.11.

Date _____

Signature _____

Company Name _____

Title _____

Certificate of Non-Compliance *with 49 U.S.C. § 5323(j)(2)(C)*

The Bidder hereby certifies that it cannot comply with the requirements of 49 U.S.C. § 5323(j)(2)(C) and 49 C.F.R. pt. 661.11, but may qualify for an exception pursuant to 49 U.S.C. §§ 5323(j)(2)(A), 5323(j)(2)(B), or 5323(j)(2)(D), and 49 C.F.R. pt. 661.7.

Date _____

Signature _____

Company Name _____

Title _____

2. CARGO PREFERENCE REQUIREMENTS
46 U.S.C. App.1241
46 C.F.R. pt. 381

Cargo Preference - Use of United States-Flag Vessels - The contractor agrees:
a) **to use** privately owned United States-Flag commercial vessels to ship at least 50 percent of the gross tonnage (computed separately for dry bulk carriers, dry cargo liners, and tankers) involved, whenever shipping any equipment, material, or commodities pursuant to the underlying contract to the extent such vessels are available at fair and reasonable rates for United States-Flag commercial vessels;
b) **to furnish within** 20 working days following the date of loading for shipments originating within the United States or within 30 working days following the date of leading for shipments originating outside the United States, a legible copy of a rated, "on-board" commercial ocean bill-of-lading in English for each shipment of cargo **described in the preceding paragraph** to the Division of National Cargo, Office of Market Development, Maritime Administration, Washington, DC 20590 and to the FTA recipient (**through the contractor in the case of a subcontractor's bill-of-lading**).
c) **to include these** requirements in **all subcontracts issued pursuant to this contract when the subcontract may involve the transport of equipment, material, or commodities by ocean vessel**.

3. ENERGY CONSERVATION REQUIREMENTS
42 U.S.C. § 6321 *et seq*.
49 C.F.R. pt. 18

Energy Conservation - The contractor agrees to comply with mandatory standards and policies relating to energy efficiency which are contained in the state energy conservation plan issued in compliance with the Energy Policy and Conservation Act.

4. CLEAN WATER REQUIREMENTS
33 U.S.C. § 1251

Clean Water - (1) The Contractor agrees to comply with all applicable standards, orders or regulations issued pursuant to the Federal Water Pollution Control Act, as amended, 33 U.S.C. § 1251 *et seq*. The Contractor agrees to report each violation to the Purchaser and understands and agrees that the Purchaser will, in turn, report each violation as required to assure notification to FTA and the appropriate Environmental Protection Agency (EPA) Regional Office.
(2) The Contractor also agrees to include these requirements in each subcontract exceeding $100,000 financed in whole or in part with Federal assistance provided by FTA.

5. BUS TESTING
49 U.S.C. § 5318(c)
49 C.F.R.pt. 665, App. A

Bus Testing - The Contractor [Manufacturer] _____ agrees to comply with 49 U.S.C. § 5318(c) and FTA's implementing regulation at 49 C.F.R. pt. 665 and shall perform the following:

1) A manufacturer of a new bus model or a bus produced with a major change in components or configuration shall provide a copy of the final test report to the recipient at a point in the procurement process specified by the recipient which will be prior to the recipient's final acceptance of the first vehicle.

2) A manufacturer who releases a report under paragraph 1 above shall provide notice to the operator of the testing facility that the report is available to the public.

3) If the manufacturer represents that the vehicle was previously tested, the vehicle being sold should have the identical configuration and major components as the vehicle in the test report, which must be provided to the recipient prior to recipient's final acceptance of the first vehicle. If the configuration or components are not identical, the manufacturer shall provide a description of the change and the manufacturer's basis for concluding that it is not a major change requiring additional testing.

4) If the manufacturer represents that the vehicle is "grandfathered" (has been used in mass transit service in the United States before October 1, 1988, and is currently being produced without a major change in configuration or components), the manufacturer shall provide the name and address of the recipient of such a vehicle and the details of that vehicle's configuration and major components.

The Manufacturer must submit with the proposal Bus Testing Certificate and the Bus Testing Report.

CERTIFICATION OF COMPLIANCE WITH FTA'S BUS TESTING REQUIREMENTS

The undersigned [Contractor/Manufacturer] certifies that the vehicle offered in this procurement complies with 49 U.S.C. § 5318(e) and FTA's implementing regulation at 49 C.F.R.pt. 665. The undersigned understands that misrepresenting the testing status of a vehicle acquired with Federal financial assistance may subject the undersigned to civil penalties as outlined in the Department of Transportation's regulation on Program Fraud Civil Remedies, 49 C.F.R. pt. 31. In addition, the undersigned understands that FTA may suspend or debar a manufacturer under the procedures in 2 C.F.R. pt. 1200.

Date: _____

Signature: _____

Company Name: _____

Title: _____

6. PRE-AWARD AND POST DELIVERY AUDITS REQUIREMENTS
49 U.S.C. 5323
49 C.F.R. pt. 663

- Buy America certification is mandated under FTA regulation, "Pre-Award and Post-Delivery Audits of Rolling Stock Purchases," 49 C.F.R. pt. 663.13.

- Specific language for the Buy America certification is mandated by FTA regulation, "Buy America Requirements--Surface Transportation Assistance Act of 1982," as amended, 49 C.F.R. pt. 661.12, but has been modified to include FTA's Buy America requirements codified at 49 U.S.C. § 5323(j).

Pre-Award and Post-Delivery Audit Requirements - The Contractor agrees to comply with 49 U.S.C. § 5323(d)(l) and FTA's implementing regulation at 49 C.F.R. pt. 663 and to submit the following certifications:

(1) Buy America Requirements: The Contractor shall complete and submit a declaration certifying either compliance or noncompliance with Buy America. If the Bidder certifies compliance with Buy America, it shall submit documentation which lists 1) component and subcomponent parts of the rolling stock to be purchased identified by manufacturer of the parts, their country of origin and costs; and 2) the location of the final assembly point for the rolling stock, including a description of the activities that will take place at the final assembly point and the cost of final assembly.

(2) Solicitation Specification Requirements: The Contractor shall submit evidence that it will be capable of meeting the bid specifications.

(3) Federal Motor Vehicle Safety Standards (FMVSS): The Contractor shall submit 1) manufacturer's FMVSS self-certification sticker information that the vehicle complies with relevant FMVSS or 2) manufacturer's certified statement that the contracted buses will not be subject to FMVSS regulations.

BUY AMERICA CERTIFICATE OF COMPLIANCE WITH FTA REQUIREMENTS FOR BUSES, OTHER ROLLING STOCK, OR ASSOCIATED EQUIPMENT

(To be submitted with a bid exceeding the small purchase threshold for Federal assistance programs, currently set at $100,000)

Certificate of Compliance

The Bidder hereby certifies that it will comply with the requirements of 49 U.S.C. § 5323(j)(2)(C), § 165(b)(3) of the Surface Transportation Assistance Act of 1982, as amended, and the regulations of 49 C.F.R. pt. 661.11:

Date: _____

Signature: _____

Company Name: _____

Title: _____

Certificate of Non-Compliance

The Bidder hereby certifies that it cannot comply with the requirements of 49 U.S.C. § 5323(j)(2)(C) and § 165(b)(3) of the Surface Transportation Assistance Act of 1982, as amended, but may qualify for an exception to the requirements consistent with 49 U.S.C. §§ 5323(j)(2)(B) or (j)(2)(D), 165(b)(2) or (b)(4) of the Surface Transportation Assistance Act, as amended, and regulations in 49 C.F.R. pt. 661.7.

Date: _____

Signature: _____

Company Name: _____

Title: _____

7. LOBBYING
31 U.S.C. § 1352
49 C.F.R.pt. 19
49 C.F.R. pt. 20

- Lobbying Certification and Disclosure of Lobbying Activities for third party contractors are mandated by 31 U.S.C. § 1352(b)(5), as amended by § 10 of the Lobbying Disclosure Act of 1995, and Department of Transportation (DOT) implementing regulation, "New Restrictions on Lobbying," at 49 C.F.R. § . 20.110(d)

- Language in Lobbying Certification is mandated by 49 C.F.R. pt. 19, Appendix A, Section 7, which provides that contractors file the certification required by 49 C.F.R. pt. 20, Appendix A.

Modifications have been made to the Lobbying Certification pursuant to Section 10 of the Lobbying Disclosure Act of 1995.

- Use of "Disclosure of Lobbying Activities," Standard Form-LLL set forth in Appendix B of 49 C.F.R.pt. 20, as amended by "Government Wide Guidance For New Restrictions on Lobbying," 61 Fed. Reg. 1413 (1/19/96) is mandated by 49 C.F.R. pt. 20, Appendix A.

Byrd Anti-Lobbying Amendment, 31 U.S.C. § 1352, as amended by the Lobbying Disclosure Act of 1995, 2 U.S.C. § 1601, *et seq*.] - Contractors who apply or bid for an award of $100,000 or more shall file the certification required by 49 C.F.R. pt. 20, "New Restrictions on Lobbying." Each tier certifies to the tier above that it will not and has not used Federal appropriated funds to pay any person or organization for influencing or attempting to influence an officer or employee of any agency, a member of Congress, officer or employee of Congress, or an employee of a member of Congress in connection with obtaining any Federal contract, grant or any other award covered by 31 U.S.C. § 1352. Each tier shall also disclose the name of any registrant under the Lobbying Disclosure Act of 1995 who has made lobbying contacts on its behalf with non-Federal funds with respect to that Federal contract, grant or award covered by 31 U.S.C. § 1352. Such disclosures are forwarded from tier to tier up to the recipient.

APPENDIX A, 49 C.F.R. pt. 20--CERTIFICATION REGARDING LOBBYING
Certification for Contracts, Grants, Loans, and Cooperative Agreements
(To be submitted with each bid or offer exceeding $100,000)

The undersigned [Contractor] certifies, to the best of his or her knowledge and belief, that:
(1) No Federal appropriated funds have been paid or will be paid, by or on behalf of the undersigned, to any person for influencing or attempting to influence an officer or employee of an agency, a Member of Congress, an officer or employee of Congress, or an employee of a Member of Congress in connection with the awarding of any Federal contract, the making of any Federal grant, the making of any Federal loan, the entering into of any cooperative agreement, and the extension, continuation, renewal, amendment, or modification of any Federal contract, grant, loan, or cooperative agreement.

(2) If any funds other than Federal appropriated funds have been paid or will be paid to any person for making lobbying contacts to an officer or employee of any agency, a Member of Congress, an officer or employee of Congress, or an employee of a Member of Congress in connection with this Federal contract, grant, loan, or cooperative agreement, the undersigned shall complete and submit Standard Form--LLL, "Disclosure Form to Report Lobbying," in accordance with its instructions [as amended by "Government Wide Guidance for New Restrictions on Lobbying," 61 Fed. Reg. 1413 (1/19/96). Note: Language in paragraph (2) herein has been modified in accordance with Section10 of the Lobbying Disclosure Act of 1995, 2 U.S.C. § 1601, *et seq.*]
(3) The undersigned shall require that the language of this certification be included in the award documents for all subawards at all tiers (including subcontracts, subgrants, and contracts under grants, loans, and cooperative agreements) and that all subrecipients shall certify and disclose accordingly.

This certification is a material representation of fact upon which reliance was placed when this transaction was made or entered into. Submission of this certification is a prerequisite for making or entering into this transaction imposed by 31, U.S.C. § 1352 (as amended by the Lobbying Disclosure Act of 1995). Any person who fails to file the required certification shall be subject to a civil penalty of not less than $10,000 and not more than $100,000 for each such failure.
[Note: Pursuant to 31 U.S.C. § 1352(c)(1)-(2)(A), any person who makes a prohibited expenditure or fails to file or amend a required certification or disclosure form shall be subject to a civil penalty of not less than $10,000 and not more than $100,000 for each such expenditure or failure.]

The Contractor, _____, certifies or affirms the truthfulness and accuracy of each statement of its certification and disclosure, if any. In addition, the Contractor understands and agrees that the provisions of 31 U.S.C. § 3801 *et seq.,* apply to this certification and disclosure, if any.

_____ _____
Signature of Contractor's Authorized Official Date

_____
Name and Title of Contractor's Authorized Official

8. ACCESS TO RECORDS AND REPORTS
49 U.S.C. § 5325
18 C.F.R. pt.18.36 (i)
49 C.F.R. pt. 633.15

Access to Records - The following access to records requirements apply to this Contract:

1. Where the Purchaser is not a State but a local government and is the FTA Recipient or a subgrantee of the FTA Recipient in accordance with 49 C.F.R. pt. 18.36(i), the Contractor agrees to provide the Purchaser, the FTA Administrator, the Comptroller General of the United States or any of their authorized representatives access to any books, documents, papers and records of the Contractor which are directly pertinent to this contract for the purposes of making audits,

examinations, excerpts and transcriptions. Contractor also agrees, pursuant to 49 C.F.R. pt. 633.15 to provide the FTA Administrator or his authorized representatives including any PMO Contractor access to Contractor's records and construction sites pertaining to a major capital project, defined at 49 U.S.C. § 5302(a)(1), which is receiving federal financial assistance through the programs described at 49 U.S.C. §§ 5307, 5309 or 5311.

2. Where the Purchaser is a State and is the FTA Recipient or a subgrantee of the FTA Recipient in accordance with 49 C.F.R. pt. 633.15, Contractor agrees to provide the Purchaser, the FTA Administrator or his authorized representatives, including any PMO Contractor, access to the Contractor's records and construction sites pertaining to a major capital project, defined at 49 U.S.C.§ 5302(a)1, which is receiving federal financial assistance through the programs described at 49 U.S.C. §§ 5307, 5309 or 5311. By definition, a major capital project excludes contracts of less than the simplified acquisition threshold currently set at $100,000.

3. Where the Purchaser enters into a negotiated contract for other than a small purchase or under the simplified acquisition threshold and is an institution of higher education, a hospital or other non-profit organization and is the FTA Recipient or a subgrantee of the FTA Recipient in accordance with 49 C.F.R. pt. 19.48, Contractor agrees to provide the Purchaser, FTA Administrator, the Comptroller General of the United States or any of their duly authorized representatives with access to any books, documents, papers and record of the Contractor which are directly pertinent to this contract for the purposes of making audits, examinations, excerpts and transcriptions.

4. Where any Purchaser which is the FTA Recipient or a subgrantee of the FTA Recipient in accordance with 49 U.S.C. § 5325(a) enters into a contract for a capital project or improvement (defined at 49 U.S.C. § 5302(a)(1)) through other than competitive bidding, the Contractor shall make available records related to the contract to the Purchaser, the Secretary of Transportation and the Comptroller General or any authorized officer or employee of any of them for the purposes of conducting an audit and inspection.

5. The Contractor agrees to permit any of the foregoing parties to reproduce by any means whatsoever or to copy excerpts and transcriptions as reasonably needed.

6. The Contractor agrees to maintain all books, records, accounts and reports required under this contract for a period of not less than three years after the date of termination or expiration of this contract, except in the event of litigation or settlement of claims arising from the performance of this contract, in which case Contractor agrees to maintain same until the Purchaser, the FTA Administrator, the Comptroller General, or any of their duly authorized representatives, have disposed of all such litigation, appeals, claims or exceptions related thereto. 49 C.F.R. pt. 18.36(i)(11).

7. FTA does not require the inclusion of these requirements in subcontracts.

Requirements for Access to Records and Reports by Types of Contract

Contract Characteristics		Operational Service Contract	Turnkey	Construction	Architectural Engineering	Acquisition of Rolling Stock	Professional Services
I State Grantees a. Contracts below SAT ($100,000) b. Contracts above $100,000/Capital Projects		None None unless[1] non-competitive award	Those imposed on state pass thru to Contractor	None Yes, if non-competitive award or if funded thru[2] 5307/5309/5311	None None unless non-competitive award	None None unless non-competitive award	None None unless non-competitive award
II Non State Grantees a. Contracts below SAT ($100,000) b. Contracts above $100,000/Capital Projects		Yes[3] Yes[3]	Those imposed on non-state Grantee pass thru to Contractor	Yes Yes	Yes Yes	Yes Yes	Yes Yes

Sources of Authority:
[1] 49 U.S.C. § 5325(a)
[2] 49 C.F.R. pt. 633.17
[3] 18 C.F.R. pt. 18.36(i)

9. FEDERAL CHANGES
49 C.F.R. pt. 18

Federal Changes - Contractor shall at all times comply with all applicable FTA regulations, policies, procedures and directives, including without limitation those listed directly or by reference in the Master Agreement between Purchaser and FTA, as they may be amended or promulgated from time to time during the term of this contract. Contractor's failure to so comply shall constitute a material breach of this contract.

10. CLEAN AIR
42 U.S.C. §§ 7401 *et seq*.
49 C.F.R. pt. 18

Clean Air - (1) The Contractor agrees to comply with all applicable standards, orders or regulations issued pursuant to the Clean Air Act, as amended, 42 U.S.C. §§ 7401 *et seq*. The Contractor agrees to report each violation to the Purchaser and understands and agrees that the Purchaser will, in turn, report each violation as required to assure notification to FTA and the appropriate EPA Regional Office.

(2) The Contractor also agrees to include these requirements in each subcontract exceeding $100,000 financed in whole or in part with Federal assistance provided by FTA.

11. RECYCLED PRODUCTS
42 U.S.C. 6962
40 C.F.R. pt. 247
Executive Order 12873

Recovered Materials - The contractor agrees to comply with all the requirements of Section 6002 of the Resource Conservation and Recovery Act (RCRA), as amended (42 U.S.C. § 6901), including but not limited to the regulatory provisions of 40 C.F.R. pt. 247, and Executive Order 12873, as they apply to the procurement of the items designated in Subpart B of 40 C.F.R. pt. 247.

12. NO GOVERNMENT OBLIGATION TO THIRD PARTIES

(1) The Purchaser and Contractor acknowledge and agree that, notwithstanding any concurrence by the Federal Government in or approval of the solicitation or award of the underlying contract, absent the express written consent by the Federal Government, the Federal Government is not a party to this contract and shall not be subject to any obligations or liabilities to the Purchaser, Contractor, or any other party (whether or not a party to that contract) pertaining to any matter resulting from the underlying contract.

(2) The Contractor agrees to include the above clause in each subcontract financed in whole or in part with Federal assistance provided by FTA. It is further agreed that the clause shall not be modified, except to identify the subcontractor who will be subject to its provisions.

13. PROGRAM FRAUD AND FALSE OR FRAUDULENT STATEMENTS AND RELATED ACTS
31 U.S.C. §§ 3801 *et seq*.
49 C.F.R. pt. 31 18 U.S.C. § 1001
49 U.S.C. § 5307

Program Fraud and False or Fraudulent Statements or Related Acts.

(1) The Contractor acknowledges that the provisions of the Program Fraud Civil Remedies Act of 1986, as amended, 31 U.S.C. § 3801 *et seq.* and U.S. DOT regulations, "Program Fraud Civil Remedies," 49 C.F.R. pt.31, apply to its actions pertaining to this Project. Upon execution of the underlying contract, the Contractor certifies or affirms the truthfulness and accuracy of any statement it has made, it makes, it may make, or causes to be made, pertaining to the underlying contract or the FTA assisted project for which this contract work is being performed. In addition to other penalties that may be applicable, the Contractor further acknowledges that if it makes, or causes to be made, a false, fictitious, or fraudulent claim, statement, submission, or certification, the Federal Government reserves the right to impose the penalties of the Program Fraud Civil Remedies Act of 1986 on the Contractor to the extent the Federal Government deems appropriate.

(2) The Contractor also acknowledges that if it makes, or causes to be made, a false, fictitious, or fraudulent claim, statement, submission, or certification to the Federal Government under a contract connected with a project that is financed in whole or in part with Federal assistance originally awarded by FTA under the authority of 49 U.S.C. § 5307, the Government reserves the right to impose the penalties of 18 U.S.C. § 1001 and 49 U.S.C. § 5307(n)(1) on the Contractor, to the extent the Federal Government deems appropriate.

(3) The Contractor agrees to include the above two clauses in each subcontract financed in whole or in part with Federal assistance provided by FTA. It is further agreed that the clauses shall not be modified, except to identify the subcontractor who will be subject to the provisions.

14. TERMINATION
49 U.S.C. § 10301 *et seq.*
FTA Circular 4220.1F

a. Termination for Convenience (General Provision) The (Recipient) may terminate this contract, in whole or in part, at any time by written notice to the Contractor when it is in the Government's best interest. The Contractor shall be paid its costs, including contract close-out costs, and profit on work performed up to the time of termination. The Contractor shall promptly submit its termination claim to (Recipient) to be paid the Contractor. If the Contractor has any property in its possession belonging to the (Recipient), the Contractor will account for the same, and dispose of it in the manner the (Recipient) directs.

b. Termination for Default [Breach or Cause] (General Provision) If the Contractor does not deliver supplies in accordance with the contract delivery schedule, or, if the contract is for services, the Contractor fails to perform in the manner called for in the contract, or if the Contractor fails to comply with any other provisions of the contract, the (Recipient) may terminate this contract for default. Termination shall be effected by serving a notice of termination on the contractor setting forth the manner in which the Contractor is in default. The contractor will only be paid the contract price for supplies delivered and accepted, or services performed in accordance with the manner of performance set forth in the contract. If it is later determined by the (Recipient) that the Contractor had an excusable reason for not performing, such as a strike, fire, or flood, events which are not the fault of or are beyond the control of the Contractor, the (Recipient), after setting up a new delivery of performance schedule, may allow the Contractor to continue work, or treat the termination as a termination for convenience.

c. Opportunity to Cure (General Provision) The (Recipient) in its sole discretion may, in the case of a termination for breach or default, allow the Contractor [an appropriately short period of time] in which to cure the defect. In such case, the notice of termination will state the time period in which cure is permitted and other appropriate conditions

If Contractor fails to remedy to (Recipient)'s satisfaction the breach or default of any of the terms, covenants, or conditions of this Contract within 10 days after receipt by Contractor of written notice from (Recipient) setting forth the nature of said breach or default, (Recipient) shall have the right to terminate the Contract without any further obligation to Contractor. Any such

termination for default shall not in any way operate to preclude (Recipient) from also pursuing all available remedies against Contractor and its sureties for said breach or default.

d. Waiver of Remedies for any Breach In the event that (Recipient) elects to waive its remedies for any breach by Contractor of any covenant, term or condition of this Contract, such waiver by (Recipient) shall not limit (Recipient)'s remedies for any succeeding breach of that or of any other term, covenant, or condition of this Contract.

e. Termination for Convenience (Professional or Transit Service Contracts) The (Recipient), by written notice, may terminate this contract, in whole or in part, when it is in the Government's interest. If this contract is terminated, the Recipient shall be liable only for payment under the payment provisions of this contract for services rendered before the effective date of termination.

f. Termination for Default (Supplies and Service) If the Contractor fails to deliver supplies or to perform the services within the time specified in this contract or any extension or if the Contractor fails to comply with any other provisions of this contract, the (Recipient) may terminate this contract for default. The (Recipient) shall terminate by delivering to the Contractor a Notice of Termination specifying the nature of the default. The Contractor will only be paid the contract price for supplies delivered and accepted, or services performed in accordance with the manner or performance set forth in this contract.

If, after termination for failure to fulfill contract obligations, it is determined that the Contractor was not in default, the rights and obligations of the parties shall be the same as if the termination had been issued for the convenience of the Recipient.

g. Termination for Default (Transportation Services) If the Contractor fails to pick up the commodities or to perform the services, including delivery services, within the time specified in this contract or any extension or if the Contractor fails to comply with any other provisions of this contract, the (Recipient) may terminate this contract for default. The (Recipient) shall terminate by delivering to the Contractor a Notice of Termination specifying the nature of default. The Contractor will only be paid the contract price for services performed in accordance with the manner of performance set forth in this contract.

If this contract is terminated while the Contractor has possession of Recipient goods, the Contractor shall, upon direction of the (Recipient), protect and preserve the goods until surrendered to the Recipient or its agent. The Contractor and (Recipient) shall agree on payment for the preservation and protection of goods. Failure to agree on an amount will be resolved under the Dispute clause.

If, after termination for failure to fulfill contract obligations, it is determined that the Contractor was not in default, the rights and obligations of the parties shall be the same as if the termination had been issued for the convenience of the (Recipient).

h. Termination for Default (Construction) If the Contractor refuses or fails to prosecute the work or any separable part, with the diligence that will ensure its completion within the time specified in this contract or any extension or fails to complete the work within this time, or if the

Contractor fails to comply with any other provisions of this contract, the (Recipient) may terminate this contract for default. The (Recipient) shall terminate by delivering to the Contractor a Notice of Termination specifying the nature of the default. In this event, the Recipient may take over the work and compete it by contract or otherwise, and may take possession of and use any materials, appliances, and plant on the work site necessary for completing the work. The Contractor and its sureties shall be liable for any damage to the Recipient resulting from the Contractor's refusal or failure to complete the work within specified time, whether or not the Contractor's right to proceed with the work is terminated. This liability includes any increased costs incurred by the Recipient in completing the work.

The Contractor's right to proceed shall not be terminated nor shall the Contractor be charged with damages under this clause if

1. the delay in completing the work arises from unforeseeable causes beyond the control and without the fault or negligence of the Contractor. Examples of such causes include: acts of God, acts of the Recipient, acts of another Contractor in the performance of a contract with the Recipient, epidemics, quarantine restrictions, strikes, freight embargoes; and
2. the contractor, within 10 days from the beginning of any delay, notifies the (Recipient) in writing of the causes of delay. If in the judgment of the (Recipient), the delay is excusable, the time for completing the work shall be extended. The judgment of the (Recipient) shall be final and conclusive on the parties, but subject to appeal under the Disputes clauses.

If, after termination of the Contractor's right to proceed, it is determined that the Contractor was not in default, or that the delay was excusable, the rights and obligations of the parties will be the same as if the termination had been issued for the convenience of the Recipient.

i. Termination for Convenience or Default (Architect and Engineering) The (Recipient) may terminate this contract in whole or in part, for the Recipient's convenience or because of the failure of the Contractor to fulfill the contract obligations. The (Recipient) shall terminate by delivering to the Contractor a Notice of Termination specifying the nature, extent, and effective date of the termination. Upon receipt of the notice, the Contractor shall (1) immediately discontinue all services affected (unless the notice directs otherwise), and (2) deliver to the Contracting Officer all data, drawings, specifications, reports, estimates, summaries, and other information and materials accumulated in performing this contract, whether completed or in process.

If the termination is for the convenience of the Recipient, the Contracting Officer shall make an equitable adjustment in the contract price but shall allow no anticipated profit on unperformed services.

If the termination is for failure of the Contractor to fulfill the contract obligations, the Recipient may complete the work by contact or otherwise and the Contractor shall be liable for any additional cost incurred by the Recipient.

If, after termination for failure to fulfill contract obligations, it is determined that the Contractor was not in default, the rights and obligations of the parties shall be the same as if the termination had been issued for the convenience of the Recipient.

j. Termination for Convenience of Default (Cost-Type Contracts) The (Recipient) may terminate this contract, or any portion of it, by serving a notice or termination on the Contractor. The notice shall state whether the termination is for convenience of the (Recipient) or for the default of the Contractor. If the termination is for default, the notice shall state the manner in which the contractor has failed to perform the requirements of the contract. The Contractor shall account for any property in its possession paid for from funds received from the (Recipient), or property supplied to the Contractor by the (Recipient). If the termination is for default, the (Recipient) may fix the fee, if the contract provides for a fee, to be paid the contractor in proportion to the value, if any, of work performed up to the time of termination. The Contractor shall promptly submit its termination claim to the (Recipient) and the parties shall negotiate the termination settlement to be paid the Contractor.

If the termination is for the convenience of the (Recipient), the Contractor shall be paid its contract close-out costs, and a fee, if the contract provided for payment of a fee, in proportion to the work performed up to the time of termination.

If, after serving a notice of termination for default, the (Recipient) determines that the Contractor has an excusable reason for not performing, such as strike, fire, flood, events which are not the fault of and are beyond the control of the contractor, the (Recipient), after setting up a new work schedule, may allow the Contractor to continue work, or treat the termination as a termination for convenience.

15. GOVERNMENT WIDE DEBARMENT AND SUSPENSION (NONPROCUREMENT)

This contract is a covered transaction for purposes of U.S.DOT regulations, "Nonprocurement Suspension and Debarment," 2 C.F.R. pt. 1200, which adopts and supplements U.S. Office of Management and Budget (U.S. OMB) "Guidelines to Agencies on Government Wide Debarment and Suspension (Nonprocurement)," 2 C.F.R. pt. 180.

Accordingly:

(1) The Contractor agrees to comply with the requirements of 2 C.F.R. pt. 1200, which adopts and supplements 2 C.F.R. pt. 180, throughout the period of this contract.

(2) The Contractor verifies that neither it, including its principals and affiliates, nor any of its principals in this contract, including subcontractors at any tier with contracts of $25,000 or more, or requires the consent of a Federal official, or is for federally required audit services are presently excluded or disqualified, under the standards of those U.S. DOT regulations and U.S. OMB guidelines; or have been provided an exception in accordance with those U.S. DOT regulations and U.S. OMB guidelines. Among other things, the Contractor before entering into a covered subcontract, the Contractor agrees to:

(a) Check the U.S. General Services Administration Excluded Parties List System (EPLS); or

(b) Collect a certification from that person; or

(c) Add a clause or condition the invitation for bids or request for proposals pertaining to a covered third party contract or transaction.

(3) The Contractor agrees that it must inform the *buyer/owner* of any different information that may later come to its attention for the duration of this contract.

(4) The Contractor agrees to include a similar clause in any subcontract at any tier expected to be priced at $25,000 or more *(or if applicable, contract at any tier that requires the consent of a Federal official, or contract at any tier for federally required audit services of any value).*

16. PRIVACY ACT
5 U.S.C. § 552

Contracts Involving Federal Privacy Act Requirements - The following requirements apply to the Contractor and its employees that administer any system of records on behalf of the Federal Government under any contract:

(1) The Contractor agrees to comply with, and assures the compliance of its employees with, the information restrictions and other applicable requirements of the Privacy Act of 1974, 5 U.S.C. § 552a. Among other things, the Contractor agrees to obtain the express consent of the Federal Government before the Contractor or its employees operate a system of records on behalf of the Federal Government. The Contractor understands that the requirements of the Privacy Act, including the civil and criminal penalties for violation of that Act, apply to those individuals involved, and that failure to comply with the terms of the Privacy Act may result in termination of the underlying contract.

(2) The Contractor also agrees to include these requirements in each subcontract to administer any system of records on behalf of the Federal Government financed in whole or in part with Federal assistance provided by FTA.

17. CIVIL RIGHTS REQUIREMENTS
42 U.S.C. § 6102, 42 U.S.C. § 12112
42 U.S.C. § 12132, 49 U.S.C. § 5332
29 C.F.R. pt. 1630, 41 C.F.R. pts. 60 *et seq.*

Civil Rights - The following requirements apply to the underlying contract:

(1) **Nondiscrimination** - In accordance with Title VI of the Civil Rights Act, as amended, 42 U.S.C. § 2000d, section 303 of the Age Discrimination Act of 1975, as amended, 42 U.S.C. § 6102, section 202 of the Americans with Disabilities Act of 1990, 42 U.S.C. § 12132, and Federal transit law at 49 U.S.C. § 5332, the Contractor agrees that it will not discriminate against any employee or applicant for employment because of race, color, creed, national origin, sex, age, or disability. In addition, the Contractor agrees to comply with applicable Federal implementing regulations and other implementing requirements FTA may issue.

(2) **Equal Employment Opportunity** - The following equal employment opportunity requirements apply to the underlying contract:
(a) **Race, Color, Creed, National Origin, Sex** - In accordance with Title VII of the Civil Rights Act, as amended, 42 U.S.C. § 2000e, and Federal transit laws at 49 U.S.C. § 5332, the Contractor

agrees to comply with all applicable equal employment opportunity requirements of U.S. Department of Labor (U.S. DOL) regulations, "Office of Federal Contract Compliance Programs, Equal Employment Opportunity, Department of Labor," 41 C.F.R. pts. 60 *et seq*., (which implement Executive Order No. 11246, "Equal Employment Opportunity," as amended by Executive Order No. 11375, "Amending Executive Order 11246 Relating to Equal Employment Opportunity," 42 U.S.C. § 2000e note), and with any applicable Federal statutes, executive orders, regulations, and Federal policies that may in the future affect construction activities undertaken in the course of the Project. The Contractor agrees to take affirmative action to ensure that applicants are employed, and that employees are treated during employment, without regard to their race, color, creed, national origin, sex, or age. Such action shall include, but not be limited to, the following: employment, upgrading, demotion or transfer, recruitment or recruitment advertising, layoff or termination; rates of pay or other forms of compensation; and selection for training, including apprenticeship. In addition, the Contractor agrees to comply with any implementing requirements FTA may issue.
(b) **Age** - In accordance with section 4 of the Age Discrimination in Employment Act of 1967, as amended, 29 U.S.C. §§ 623 and Federal transit law at 49 U.S.C. § 5332, the Contractor agrees to refrain from discrimination against present and prospective employees for reason of age. In addition, the Contractor agrees to comply with any implementing requirements FTA may issue.
(c) **Disabilities** - In accordance with section 102 of the Americans with Disabilities Act, as amended, 42 U.S.C. § 12112, the Contractor agrees that it will comply with the requirements of U.S. Equal Employment Opportunity Commission, "Regulations to Implement the Equal Employment Provisions of the Americans with Disabilities Act," 29 C.F.R. pt. 1630, pertaining to employment of persons with disabilities. In addition, the Contractor agrees to comply with any implementing requirements FTA may issue.

(3) The Contractor also agrees to include these requirements in each subcontract financed in whole or in part with Federal assistance provided by FTA, modified only if necessary to identify the affected parties.

18. BREACHES AND DISPUTE RESOLUTION
49 C.F.R. pt. 18
FTA Circular 4220.1F

Applicability to Contracts
All contracts in excess of $100,000 shall contain provisions or conditions which will allow for administrative, contractual, or legal remedies in instances where contractors violate or breach contract terms, and provide for such sanctions and penalties as may be appropriate. This may include provisions for bonding, penalties for late or inadequate performance, retained earnings, liquidated damages or other appropriate measures.

Flow Down
The Breaches and Dispute Resolutions requirements flow down to all tiers.

Model Clauses/Language
FTA does not prescribe the form or content of such provisions. What provisions are developed will depend on the circumstances and the type of contract. Recipients should consult legal

counsel in developing appropriate clauses. The following clauses are examples of provisions from various FTA third party contracts.

Disputes - Disputes arising in the performance of this Contract which are not resolved by agreement of the parties shall be decided in writing by the authorized representative of (Recipient)'s [title of employee]. This decision shall be final and conclusive unless within 10 days from the date of receipt of its copy, the Contractor mails or otherwise furnishes a written appeal to the [title of employee]. In connection with any such appeal, the Contractor shall be afforded an opportunity to be heard and to offer evidence in support of its position. The decision of the [title of employee] shall be binding upon the Contractor and the Contractor shall abide be the decision.

Performance During Dispute - Unless otherwise directed by (Recipient), Contractor shall continue performance under this Contract while matters in dispute are being resolved.

Claims for Damages - Should either party to the Contract suffer injury or damage to person or property because of any act or omission of the party or of any of his employees, agents or others for whose acts he is legally liable, a claim for damages therefore shall be made in writing to such other party within a reasonable time after the first observance of such injury of damage.

Remedies - Unless this contract provides otherwise, all claims, counterclaims, disputes and other matters in question between the (Recipient) and the Contractor arising out of or relating to this agreement or its breach will be decided by arbitration if the parties mutually agree, or in a court of competent jurisdiction within the State in which the (Recipient) is located.

Rights and Remedies - The duties and obligations imposed by the Contract Documents and the rights and remedies available thereunder shall be in addition to and not a limitation of any duties, obligations, rights and remedies otherwise imposed or available by law. No action or failure to act by the (Recipient), (Architect) or Contractor shall constitute a waiver of any right or duty afforded any of them under the Contract, nor shall any such action or failure to act constitute an approval of or acquiescence in any breach thereunder, except as may be specifically agreed in writing.

19. DISADVANTAGED BUSINESS ENTERPRISE (DBE)
49 C.F.R. pt. 26

Background and Applicability

The newest version on the Department of Transportation's Disadvantaged Business Enterprise (DBE) program became effective July 16, 2003. The rule provides guidance to grantees on the use of overall and contract goals, requirement to include DBE provisions in subcontracts, evaluating DBE participation where specific contract goals have been set, reporting requirements, and replacement of DBE subcontractors. Additionally, the DBE program dictates payment terms and conditions (including limitations on retainage) applicable to all subcontractors regardless of whether they are DBE firms or not.

The DBE program applies to all DOT-assisted contracting activities. A formal clause such as that below must be included in all contracts above the micro-purchase level. The requirements of subsection b flow down to subcontracts. A substantial change to the payment provisions in this newest version of Part 26 concerns retainage (*see* section 26.29). Grantee choices concerning retainage should be reflected in the language choices in subsection d.

Disadvantaged Business Enterprises

a. This contract is subject to the requirements of Title 49, C.F.R. pt. 26, and Participation by Disadvantaged Business Enterprises in Department of Transportation Financial Assistance Programs. The national goal for participation of Disadvantaged Business Enterprises (DBE) is 10 percent. A separate contract goal **has not** been established for this procurement.

b. The contractor shall not discriminate on the basis of race, color, national origin, or sex in the performance of this contract. The contractor shall carry out applicable requirements of 49 C.F.R. pt. 26 in the award and administration of this DOT-assisted contract. Failure by the contractor to carry out these requirements is a material breach of this contract, which may result in the termination of this contract or such other remedy as DRPT deems appropriate. Each subcontract the contractor signs with a subcontractor must include the assurance in this paragraph (*see* 49 C.F.R. pt. 26.13(b)).
1. The names and addresses of DBE firms that will participate in this contract;
2. A description of the work each DBE will perform;
3. The dollar amount of the participation of each DBE firm participating;
4. Written documentation of the Bidder's commitment to use a DBE subcontractor whose participation it submits to meet the contract goal;
5. Written confirmation from the DBE that it is participating in the contract as provided in the prime contractor's commitment; and
6. If the contract goal is not met, evidence of good faith efforts to do so.
The successful Bidder/offeror will be required to report its DBE participation obtained through race-neutral means throughout the period of performance.

c. The successful contractor will be required to report its DBE obtained through race-neutral means throughout the period of performance.

d. The contractor is required to pay its subcontractors performing work related to this contract for satisfactory performance of that work no later than 30 days after the contractor's receipt of payment for that work from DRPT. In addition, the contractor is required to return any retainage payments to those subcontractors within 30 days after incremental acceptance of the subcontractor's work by the DRPT and contractor's receipt of the partial retainage payment related to the subcontractor's work.

e. The contractor must promptly notify DRPT, whenever a DBE subcontractor performing work related to this contract is terminated or fails to complete its work, and must make good faith efforts to engage another DBE subcontractor to perform at least the same amount of work. The contractor may not terminate any DBE subcontractor and perform that work through its own

forces or those of an affiliate without prior written consent of DRPT or authorized user of the contract.

20. INCORPORATION OF FEDERAL TRANSIT ADMINISTRATION (FTA) TERMS FTA Circular 4220.1E

Incorporation of Federal Transit Administration (FTA) Terms - The preceding provisions include, in part, certain Standard Terms and Conditions required by DOT, whether or not expressly set forth in the preceding contract provisions. All contractual provisions required by DOT, as set forth in FTA Circular 4220.1F, are hereby incorporated by reference. Anything to the contrary herein notwithstanding, all FTA mandated terms shall be deemed to control in the event of a conflict with other provisions contained in this Agreement. The Contractor shall not perform any act, fail to perform any act, or refuse to comply with any (name of grantee) requests which would cause (name of grantee) to be in violation of the FTA terms and conditions.

21. FTA CERTIFICATIONS

ATTACHMENT J-1

CONTRACTOR: NUMBER:

EQUIPMENT:

1.2.21 TRANSIT VEHICLE MANUFACTURE'S CERTIFICATION HAS COMPLIANCE WITH SUBPART D, 49 C.F.R. pt. 23.

This procurement is subject to the provisions of § 23.67 of 49 C.F.R. pt. 23. Accordingly, as a condition of permission to bid, the following certification must be completed and submitted with the bid. A bid, which does not include the certification, will not be considered.

TRANSIT VEHICLE MANUFACTURER CERTIFICATION

_____, a TVM, hereby certifies that it has complied with the requirements of Section 23.67 of 49 C.F.R. pt. 23 by submitting a current annual DBE goal to FTA. The goals apply to Federal Fiscal Year _____ (October 1, 20_____ to September 30, 20____) and have been approved or not disapproved by FTA.

_____, hereby certifies that the manufacturer of the transit vehicle supplied _____ has complied with the above-reference requirement of § 23.67 of 49 C.F.R. pt. 23.

Date: _____

Signature: _____

Title: _____

Firm: _____

ATTACHMENT J-2

BIDDER'S CERTIFICATION OF DISADVANTAGED BUSINESS ENTERPRISE (DBE) SUBMISSION TO FTA

The _____
(name of Bidder) hereby certifies that it has submitted plans for the participation of Disadvantaged Business Enterprise (DBE) in conformation to the U. S. Department of Transportation's Minority business Enterprise Regulations (49 C.F.R. pt. 26) and is eligible to bid on vehicle contracts awarded under assistance from the Federal Transit Administration (FTA).

Bidder's Name _____

Signature: _____ Date: _____
Authorized Agent

_____
Printed Name & Title

Subscribed and sworn to before me this _____ day of _____, 20____.

_____
Notary Public

My Commission expires _____, 20____.

ATTACHEMENT J-3

Affidavit of Non-Collusion

I hereby swear (or affirm) under the penalty for perjury:

1. That I am the Bidder (If the Bidder is an individual, a partner in the bid (if the Bidder is a partnership), or an officer or employee of the bidding corporation having authority to sign on its behalf (if the Bidder is a corporation);

2. That the attached bid or bids has been arrived at by the Bidder independently and have been submitted without collusion and without any agreement, understanding, or planned common course of action with any other vendor of materials, supplies, equipment, or service described in the invitation for bid, designed to limit independent bids or competition;

3. That the contents of the bid or bids has not been communicated by the Bidder or its employees or agents to any person not an employee or agent of the Bidder or its surety on any bond furnished with the bid or bids, and will not be communicated to any such person prior to the official opening of the bid or bids.

4. That I have fully informed myself regarding the accuracy of the statements made in the affidavit.

Bidder's Name:_____

Signature: _____ Date: _____
Authorized Signature

_____
Print Name and Title

Subscribed and sworn to before me this _____ day of _____, 20_____.

_____
Notary public

My Commission expires _____, 20_____.

Bidder's E.I. Number _____
(Number used on employer's Quarterly Federal Tax Return)

DRPT
IFB 505-13-BB0002
BID RESPONSE BY SONNY MERRYMAN, INC.
(COPY)

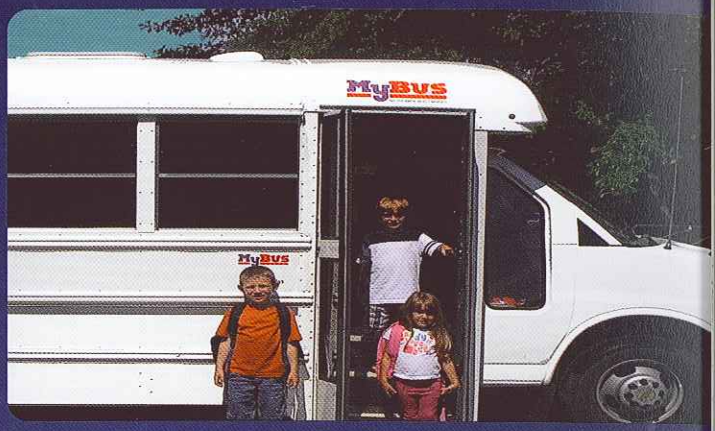

Sonny Merryman INC

VIRGINIA'S BUS COMPA

CENTRAL VIRGINIA ★ NORTHERN VIRGINIA ★ HAMPTON RO

5120 WARDS ROAD
EVINGTON, VA 24550
PN: 800.533.1006

10149 PIPER LANE
BRISTOW, VA 20136
PN: 866.470.0305

610 WOODLAKE D
CHESAPEAKE, VA 2
PN: 866.481.7

COMMONWEALTH OF VIRGINIA
DEPARTMENT OF RAIL AND PUBLIC TRANSPORTATION
600 East Main Street, Suite 2102
RICHMOND, VIRGINIA 23219

INVITATION FOR BIDS (IFB) - TERM CONTRACT
SET-ASIDE FOR SMALL BUSINESSES – Vans, Passenger (Regular and Handicapped Equipped)

The purpose of this invitation is to solicit sealed bids whereby contract(s) may be established for furnishing the equipment, materials, supplies, and/or services described herein to authorized users, if and when ordered, during the contract period.

Sealed bids will be received in the division's office at 600 East Main Street, Suite 2102 Reception Desk, Richmond, Virginia 23219 until the due date and hour shown below and then publicly opened. Failure to bid without explanation may remove your firm from the vendor registration list for that particular commodity.

Commodity:	**15 Passenger BOC (22 Ft. Wide Body)**	Issuance Date:	**April 16, 2013**
UNSPSPC CODE:	**25101505**	NIGP Commodity Code:	**07192**
Authorized Users:	**Entities within theTransportation Secretariat and Grantees of DRPT**	Pre-Bid Conference:	**April 25, 2013, 2:00 pm**
		Bid Due Date:	**May 23, 2013, 4:00 pm**
Contract Period:	**One year**	Bid Opening Date:	**May 24, 2013, 2:00 pm**
Purchase Officer:	**Ashley Nusbaum**	Phone:	**(804) 786-2890**

Important: **See page 17 of the IFB (*eVA* Business to Government Web Site) (General Term 22)**

Note: This public body does not discriminate against faith-based organizations in accordance with the *Code of Virginia*, § 2.2-4343.1or against a Bidder because of race, religion, color, sex, national origin, age, disability, or any other basis prohibited by state law relating to discrimination in employment.

In compliance with this invitation for bid and to all the conditions imposed therein, the undersigned offers and agrees to furnish the goods/services at the bid price(s) indicated. I certify that I am authorized to sign this bid.

Company Name & Address

SONNY MERRYMAN, INC.

P.O. BOX 495

RUSTBURG, VA 24588

FIN or SS Number: 54-0806176

Dun and Bradstreet No. (D-U-N-S®): 01-005-3718

Prompt Payment Discount 0 % 0 days

Date 5/23/2013

By Mark D. Roberts
Signature in ink

Name MARK ROBERTS
(Please Print)

Title VP SALES

Telephone Number (434)821-1000 X311

FAX # (434)821-8203

E-mail Mark@sonnymerryman.com

BIDDERS ARE CAUTIONED THAT ANY RESULTING CONTRACT AWARDED WILL REQUIRE THAT THE CONTRACTOR RESPOND TO PURCHASES MADE WHENEVER AND WHEREVER PLACED BY THOSE AUTHORIZED USERS HAVING REQUIREMENTS FOR THESE GOODS/SERVICES. ALL ITEMS SHALL BE F.O.B. DELIVERED TO ANY SUCH POINT WITHIN THE COMMONWEALTH OF VIRGINIA.

ATTACHMENT B

SPECIAL TERMS AND CONDITIONS

1. **eVA BUSINESS-TO-GOVERNMENT CONTRACTS AND ORDERS:** Internet electronic procurement solution, website portal www.eva.virginia.gov, streamlines and automates government purchasing activities in the Commonwealth. The portal is the gateway for vendors to conduct business with state agencies and public bodies.

   Vendors desiring to provide goods and/or services to the Commonwealth shall participate in the eVA Internet e-procurement solution and agree to comply with the following:

   If this solicitation is for a term contract, failure to provide an electronic catalog (price list) or index page catalog for items awarded will be just cause for DRPT to reject the bid or terminate this contract for default.

2. **BID OPENING:** Bids will be opened publicly on **May 24, 2013 at 2:00 p.m.** at the DRPT office at 600 East Main Street, Suite 2102, Richmond, Virginia.

3. **AWARD:** DRPT will make the awards to the lowest responsive and responsible Bidder on the basis **of base price for Vehicle excluding options**. Evaluation will be based on net prices. Unit prices, extensions and grand total must be shown. In case of arithmetic errors, the unit price will govern. If cash discount for prompt payment is offered, it must be clearly shown in the space provided. Discounts for prompt payment will not be considered in making awards. The purchasing office reserves the right to conduct any test it may deem advisable and to make all evaluations. DRPT also reserves the right to reject any or all bids, in whole or in part, to waive informalities and to delete items prior to making the award, whenever it is deemed in the sole opinion of the procuring public body to be in its best interest.

4 **BID ACCEPTANCE PERIOD:** Any bid in response to this solicitation shall be valid for 60 days. At the end of the 60 days the bid may be withdrawn at the written request of the Bidder. If the bid is not withdrawn at that time it remains in effect until an award is made or the solicitation is canceled.

5. **RENEWAL OF CONTRACT:** This contract may be renewed by DRPT for **four successive one-year periods** under the terms and conditions of the original contract. Written notice of DRPT's intention to renew shall be given approximately 90 days prior to the expiration date of each contract period.

6. **CANCELLATION OF CONTRACT:** DRPT reserves the right to cancel and terminate any resulting contract, in part or in whole, without penalty, upon 60 days written notice to the Bidder. In the event the initial contract period is for more than 12 months, the resulting contract may be terminated by either party, without penalty, after the initial 12 months of the contract period upon 60 days written notice to the other party. Any

contract cancellation notice shall not relieve the Bidder of the obligation to deliver and/or perform on all outstanding orders issued prior to the effective date of cancellation.

7. **PRICE ESCALATION/DE-ESCALATION:** Price adjustments may be permitted for changes in the Bidder's cost of materials not to exceed the increase in the following Producer's Price index: **Motor Vehicles Category WPS # 141302**. Price escalation may be permitted only at the end of the contract period and only where verified to the satisfaction of the purchasing office. However, across the board price decreases are subject to implementation at any time and shall be immediately given to DRPT. The Bidder shall give not less than 30 days advance notice of any price increase to the purchasing office. Any approved price changes will be effective only at the beginning of the calendar month following the end of the full 30 day notification period. The Bidder shall document the amount and proposed effective date of any general change in the price of materials. Documentation shall be supplied with the Bidder's request for increase which will: (1) verify that the requested price increase is general in scope and not applicable just to DRPT of Virginia; and (2) verify the amount or percentage of increase which is being passed on to the Bidder by the Bidder's suppliers.

   DRPT will notify the using entities and Bidder in writing of the effective date of any increase which it approves. However, the Bidder shall fill all purchase orders received prior to the effective date of the price adjustment at the old contract prices. **The Bidder is further advised that decreases which affect the cost of materials are required to be communicated immediately to DRPT**.

8. **DELIVERY**: Delivery of goods or performance of services shall be within the number of calendar days stated below after receipt of order (ARO) by the Bidder. DRPT requires the Bidder to deliver within a reasonable time after ARO. If the Bidder does not insert a stated delivery time in the blank below, the Bidder will be deemed to offer delivery in accordance with the DRPT's desired delivery time as stated below:

   DRPT's desired delivered time: calendar days ARO **220**

   BIDDER'S STATED DELIVERY TIME: CALENDAR DAYS ARO 150

9. **BID PRICES:** Bid shall be in the form of a firm unit price for each item during the contract period.

10. **BUILD OUT DATE**: The Bidder shall state the build out date for each model quoted and shall fill all orders placed prior to the build out date. The Bidder is permitted to accept orders after the build out date, until the termination date of the resulting contract. Failure to honor an order placed after the build out date is not a breach of the contract.

    Specify build out date: June 1, 2014

11. **PRODUCT INFORMATION:** The Bidder shall clearly and specifically identify the product being offered and enclose complete and detailed descriptive literature, catalog cuts and specifications with the bid to enable DRPT to determine if the product offered

meets the requirements of the solicitation. Failure to do so may cause the bid to be considered nonresponsive.

12. **TELEPHONE NUMBERS**: Please list the telephone number, fax number, e-mail, and the name of the responsible persons of your company who may be contacted regarding this contract. List sales and service office, addresses, and phone numbers:

NAME OF CONTACT PERSON: MARK D. ROBERTS

TELEPHONE NUMBER: (434)821-1000 x311

FAX NO.: (434)821-8203

E-MAIL: Mark@sonnymerryman.com

13. **PAYMENT**: Payment for units purchased under this contract will be in accordance with the Virginia Prompt Payment Act and § 11-62.10 of the Virginia Public Procurement Act. Payment will be made within 30 days following delivery of vehicle meeting specifications, or upon receipt of invoice, whichever occurs later. If the successful Bidder wants to assign payment on this contract to a third party, indicate here:

Name: _____

Address: _____

Other: _____

14. **QUANTITIES:** Quantities set forth in this solicitation are estimates only, and the Bidder shall supply at bid prices actual quantities as ordered, regardless of whether such total quantities are more or less than those shown.

15. **INSTALLATION:** All items must be assembled and set in place, ready for use. All crating and other debris must be removed from the premises.

16. **MAINTENANCE MANUALS:** The Bidder shall provide with each piece of equipment an operations and maintenance manual with wiring diagrams, parts list, and a copy of all warranties.

17. **SUBCONTRACTS:** No portion of the work shall be subcontracted without prior written consent of DRPT. In the event that the Bidder desires to subcontract some part of the work specified herein, the Bidder r shall furnish DRPT with the names, qualifications and experience of their proposed subcontractors. The Bidder shall, however, remain fully liable and responsible for the work to be done by its subcontractor(s) and shall assure compliance with all requirements of the contract.

ATTACHMENT E

BASE PRICE – 2013 DRPT FORD Medium Duty Bid

$ ~~44,883.00~~ $44,733.00

OPTIONS – 2013 DRPT FORD Gas BOC Bid

Options will not be included in determining low Bidder for award.

	OPTION	PRICE
1	Add 34" two passenger foldaway vertical flip seat (price per seat) in the wheelchair securement area (if available on selected model)	$875.00
2	Two strobe lights, one each roof mounted at front and rear caps. Strobes to be Specialty Model 205 mini strobe (2.25" high) or equal.	$350.00
3	Q-Straint QRT Max wheelchair securement systems vs std, each.	$95.00
4	USSC G2E Driver Seat	$1,845.00
5	Front help bumper	$1,185.00
6	Rear help bumper	$875.00
7	Ground plane installed in roof with interior door and cable conduit with pull wire routed to cab area. Please provide per unit price.	$215.00
8	Stainless steel wheel inserts	$325.00
9	Folding arm rests per seat	$40.00
10	Adjustable head rests per seat	N/A
11	ABS seat backs	$85.00
12	Front roller type destination sign (25 stations)	$1,125.00
13	Side roller type destination sign (25 stations)	$1,095.00
14	Destination sign lettering (per placement, per sign)	$30.00
15	Driver's locking document box – cabinet style with key lock on door	$275.00
16	Diamond Model XV fare-box with two vaults	$1,850.00
17	Ford Shop manuals	$265.00
18	Freedman integrated child restraint seats - single child restraint seat with companion seat	$975.00
19	Freedman integrated child restraint seats – dual child restraint seats	$1,525.00

20	Level four seat covering – per seat	$65.00
21	Level five seat covering – per seat	$80.00
22	Level six seat covering – per seat Level seven seat covering – per seat	$90.00
23	Reclining passenger seats – each	$65.00
24	30" x 42" interior baggage rack	$630.00
25	Spare tire carrier	$125.00
26	Delete rear door (credit)	($175.00)
27	Overhead standee rail (one)(standard on 15 and 19 BOC)	$125.00
28	Overhead standee rails (two)	$250.00
29	Overhead interior parcel bins	$775.00
30	Bullet style reading lights – each	$35.00
31	Reflexite reflective tape package (egress windows and body outline)	$245.00
32	Alarm and warning light signaling lift door open	$140.00
33	Sportworks DL2 two position bike rack painted steel	$2,375.00
34	Sportworks DL2 two position bike rack stainless steel	$2,875.00
35	LED clearance lights vs. standard	$375.00
36	Luminator front and side destination signs(provide model number) HORIZON	$10,950.00
37	Twin Vision front and side electronic destination signs (provide model number) MOBILITE	$6,880.00
38	Next stop signal system	$650.00
39	Child "Checkmate" system	$295.00
40	Sportworks mounting hardware (exclusive of rack, installed)	$1,050.00
41	REI three camera video surveillance system	$2,450.00
42	REI four camera video surveillance system	$2,750.00
43	REI five camera video surveillance system	$3,450.00
44	Altro safety vinyl flooring	$630.00
45	Altro flooring on side wall to seat track	$385.00
46	Echovision obstacle detection system rear mounted or equal	$725.00
47	Ricon KlearVue ADA lift	$455.00
48	Braun Vista ADA lift	$385.00
49	Add standard ambulatory seat, per seat (to match seats in vehicle)	$225.00
50	Add 34" two passenger notchback foldaway vertical flip seat in the wheelchair securement area	$1,150.00
51	Multiple buses keyed alike (each)	OPTIONS-CONTACT VENDOR
52	Driver's coat hook in radius behind driver	$25.00
53	6" x 16" interior mirror	$50.00
54	Vandal resistant seat back grab handles (each) for wall side seats	$45.00
55	Wheelchair track full width of bus vs. std	$210.00
56	Exterior step-well light	$45.00

57	Fare box floor plate and power supply	$375.00
58	GFI Odyssey fare box (specify model number) ODYSSEY 36"	$19,750.00
59	Provide jack and handle	$125.00
60	Wheelchair lift dress cover	$350.00
61	Gray interior gel coat walls vs. std	$685.00
62	36" x 36" windows vs. std	$0.00
63	Fuel sending unit access panel in floor	$75.00
64	Freedman USR retractable seat belts for each passenger	$95.00
65	Vertical seat stitching per seat	$25.00
66	Engine hour meter	$140.00
67	Delete accessibility package	($1,575.00)
68	Full body paint vs. std white	$3,125.00
69	Freedman Citi seats vs. std - INCLUDING INSERTS	$6,150.00
70	Mentor BBX and Road Ranger install	$380.00
71	Spare wheel and tire to match Original Equipment Manufacturer	$450.00
72	Yellow standee line and step nosing in lieu of standard	$25.00
73	Yellow seat back grab handles in lieu of standard	$160.00
74	Yellow stanchions and standee rails in lieu of standard	$325.00
75	Paratransit flat floor for three or more wheelchair positions	$630.00
76	Secure Connect wheelchair securements vs. standard	N/A
77	LED brake, tail and reverse lights	$345.00
78	LED upper-mounted light	$125.00
79	LED turn signals	$0.00
80	Full Bus Wrap including windows	$6,125.00
81	Full Bus Wrap excluding windows	$5,625.00
82	Driver's side aluminum running board	$315.00
83	LED interior lighting	$210.00
84	Florescent interior lighting	N/A
85	Angel Trax three camera video surveillance system	$2,700.00
86	Angel Trax four camera video surveillance system	$2,900.00
87	Angel Trax five camera video surveillance system	$3,600.00
88	Wheels shall have matching wheel covers.	$295.00
89	Exterior scheme applied with bus wrap material	$3,125.00
90	Overdrive Controller (specify model)	$525.00
91	Fixed pane transit windows	$75.00 PER WINDOW
92	Tarabus Transit non slip flooring. 2.25 mm thickness; includes silicon carbide for anti slip properties	$375.00
93	Installation of Zonar Electronic Vehicle Inspection Report System (EVIR)	$1,450.00
94	Installation of Zonar V2J: High-Definition GPS & Vehicle Diagnostics system	$1,730.00

95	Propane-Powered FTA Bus Tested Conversion – Bi-Fuel (Please provide system specifications and Altoona Test Executive Summary)	NOT TESTED
96	Propane-Powered FTA Bus Tested Conversion – Dedicated (Please provide system specifications and Altoona Test Executive Summary)	$18,900.00
97	Ford 91 G Gaseous Fuels Option for CNG/LPG Capable Engines	$175.00
98	CNG Three Tank Conversion (Please provide system specifications and Altoona Test Executive Summary)	$27,500.00
99	CNG Four Tank Conversion (Please provide system specifications and Altoona Test Executive Summary)	$29,500.00

COMMONWEALTH of VIRGINIA

Thelma D. Drake
Director

DEPARTMENT OF RAIL AND PUBLIC TRANSPORTATION
600 EAST MAIN STREET, SUITE 2102
RICHMOND, VA 23219

(804) 786-4440
FAX (804) 225 3752
VIRGINIA RELAY CENTER
1-800-828-1120 (TDD)

April 30, 2013

ADDENDUM NO. 1 TO ALL BIDDERS:

Reference – Invitation for Bid:	505-13-BB0001, 505-13-BB0002, 505-13-BB0003
Commodity:	07192 – Vans, Passenger (Regular and Handicapped Equipped)
Dated:	April 30, 2013
For Delivery To:	Department of Rail and Public Transportation, Agencies/Facilities within the Transportation Secretariat
Bid Due:	May 23, 2013
Pre-Bid Conference:	April 25, 2013

The above is hereby changed to read:

1. Reference Page 32, Wheelchair Lift: Section 3 is replaced with: "**Wheelchair Lift:** A wheelchair lift shall be included on the curbside rear of the bus at the wheelchair lift door. A Braun Century Model NCL919FIB-2 or approved equal, shall be installed and conform to the specifications as outlined in the ADA regulations Subpart B-Buses, Vans and Systems, 38.23 Mobility aid accessibility. (b) Vehicle lift - pages 45757 - 45758. The lift assembly shall safely accommodate a static load of at least 800 lbs. All power units, operating joints, linkage and mounting points to the body shall be certified by the manufacture as being adequate for the static load of the installed lift. Lift shall be equipped with a manual over-ride to permit lift to be raised or lowered manually in event of power failure or emergency. A passenger handrail shall be provided on both sides of lift platform. A complete set of operating instructions, schematics and a trouble-shooting guide shall be included with each lift."

2. Reference Page 41, Attachment E – 2013 DRPT FORD Medium Duty Bid: Item 47 is replaced with "Ricon Klear Vue ADA 800 lbs. lift".

3. Reference Page 41, Attachment E – 2013 DRPT FORD Medium Duty Bid: Add Item: "47.b. Ricon or Braun ADA 1,000 lbs. lift."

4. Reference Page 41, Attachment E – 2013 DRPT FORD Medium Duty Bid: Item 48 is replaced with "Braun ADA 800 lbs. lift."

Clarification Questions
See attached responses to all questions received on or before April 30, 2013.

All other information will remain the same.

Note: A signed acknowledgment of this addendum must be received at the location indicated on the IFB either prior to the bid due date and hour or attached to your bid. Signature on this addendum does not substitute for your signature on the original bid document. The original bid document must be signed.

Regards,
Ashley Nusbaum
Contract Officer
Phone: 804-786-2890

SONNY MERRYMAN, INC.
Name of Firm

VP SALES
Signature/Title

5/23/2013
Date

Attachment

April 30, 2013
IFB 505-13-BB0001 – Contract for 14 Passenger Body on Chassis (BOC) Buses
IFB 505-13-BB0002 – Contract for 15 Passenger Body on Chassis (BOC) Buses
IFB 505-13-BB0003 – Contract for 19 Passenger Body on Chassis (BOC) Buses
Clarification Responses

1. Is DRPT taking bids for portions of the requirements? **Answer:** No.

2. Can we get a list of potential bidders from you for a possible subcontracting agreement? **Answer:** The sign-in sheet from the pre-bid conference with the names of potential bidders will be available in eVA at the time of this posting.

3. How are grantees added to the contracts? Does the vendor or the grantee contact DRPT to make additions and can Community Colleges participate? Answer: Authorized users of the contract are State Agencies with the Transportation Secretariat and Grantees of DRPT. Grantees not on the list in Attachment H will be required to request participation in writing from DRPT. Community Colleges cannot participate on this contract.

4. Will recipients still order through eVA? Answer: If DRPT or any other state agency places an order off of the contracts, the order must be submitted through eVA (unless the state agency has an exemption). Localities / Grantees that place an order directly against the contracts may be exempted from ordering through eVA per their internal procurement policies.

5. Is it possible to add Ricon to the Wheelchair Lift specifications language on page 32 of the IFB? It is currently listed in the Options in Attachment E. Answer: Specifications will not be changed at this time. Ricon is an approved equal which is addressed on page 32 of the IFB.

6. Are the contracts a 5 year contract? Are there 4 one year renewal periods? Answer: The contract is one year with allowance for 4 one-year renewal periods (see Special Term 5 on page 18).

7. Are price increases on a PPI basis and are they allowed only at the end of a contract period? Answer: Price adjustments may be permitted for changes in the Bidder's cost of materials not to exceed the increase in the following Producer Price index: Motor Vehicles Category WPS #141302. Price escalation may be permitted only at the end of the contract period and only where verified to the satisfaction of the purchasing office. (See Special Term 7 on page 19). Since the Price Escalation Clause is a Special Term, the purchasing office would consider a mid-year increase if the reason is exceptional.

8. Will changes to the 5310 Program have any impact on these contracts? Answer: We do not believe so.

9. For the purpose of providing an accurate price quote, can you be more specific about paint packages for the vans? Answer: We do not have those at DRPT and each case will be different. Most vans in the 5310 Program will be base body white with stripes. There will be a few transit systems with all over paint and elaborate graphics packages so those will need to be negotiated on a case by case basis.

10. Is there a clause about renewals? Answer: Yes, please refer to Special Term 5 on page 18.

11. Is it possible to add a 1,000 pound lift as an option? Answer: Yes.

12. Is the Altoona Test Executive Summary required as it is not available today? Answer: Yes. Provide the price now in case the test is available at a later date during the contract period.

APPROVED EQUALS AGREEMENT

IFB 505-13-BB0001 14 Passenger Body on Chassis (BOC) Buses
IFB 505-13-BB0002 15 Passenger Body on Chassis (BOC) Buses
IFB 505-13-BB0003 19 Passenger Body on Chassis (BOC) Buses

SONNY MERRYMAN (STARCRAFT)

Page/Section	As Specified	Request	Remarks	Approved	Comments/Reason for Rejection
Page 24 / Bid Title	12 Ambulatory, One Wheelchair and Driver	Please accept 10 Ambulatory, Two Wheelchairs and Driver	Rear axle slightly overweight with the requested floor plan. Our records indicate most agencies purchased the 10 & 2 when this contract was in effect before. Sample floor plan enclosed.		***This request only pertains to the 14 Passenger Body on Chassis (BOC) Buses** **This request is denied. ADA requires placement for only one wheelchair. End users of the awarded contract will want to order the 14 Passenger BOC vehicle with only one placement.**
Page 25/ Specifications	Ground to First Step: Not to exceed 12"	Please change this to 12" +/- to allow for varying spring rates on the chassis. They float quite a bit.		√	
Page 25/ Specifications	Entry Door: 83" Clear Height	Please accept 79" actual clear opening.	Our entry door has 79" of clear height due to our seal design to limit water intrusion. The overall opening is 83" but not the clear.	√	
Page 25/ Specifications	Entry Door Black	Please accept an A&M Entry Door with normal Clear Anodizing in lieu of Black	Information enclosed	√	
Page 25/ Specifications	Stepwell frame to be powder coated white	Please accept our 2,000+ hour ASTM B117 tested primer paint on our stepwell. Our stepwell is completely enclosed on the interior and any exposed bottom and lower side surface is thoroughly undercoated to eliminate exposure to the elements.	Information enclosed	√	
Page 25/ Specifications	Wheel Chair Lift doors. 70" Clear Height	Our wheel chair lift doors provide 69" clear height at the door check mount point. They are fully ADA Compliant. Please accept our wheel chair lift doors		√	
Page 25/ Specifications	Rear Door 32" x 58" (not specified as clear)	Our Rear Door has a CLEAR opening of 35.5" x 54.5". Please accept our rear door	Information enclosed	√	
Page 26/ Specifications	Sidewall vacuum bagged.	Our sidewall exterior skin is applied using a combination of moisture cure structural adhesive and ultra high bond structural tape with an acrylic adhesive. Please accept this proven durable construction technique	Information enclosed	√	

APPROVED EQUALS AGREEMENT

IFB 505-13-BB0001 14 Passenger Body on Chassis (BOC) Buses
IFB 505-13-BB0002 15 Passenger Body on Chassis (BOC) Buses
IFB 505-13-BB0003 19 Passenger Body on Chassis (BOC) Buses

SONNY MERRYMAN (STARCRAFT)

Page/Section	As Specified	Request	Remarks	Approved	Comments/Reason for Rejection
Page 26/ Specifications	Roof panel vacuum bagged.	Our one-piece FRP roof is bonded to a substrate of luan using Hot Melt Adhesive. Please accept this proven, durable construction technique		√	
Page 28/ Specifications	The additional brake light shall either be flush mounted or armored.	Our Center High Mounted Stop Lamp is a strip type low profile that surface mounts to a tapered part of the rear cap and provides exceptional protection without the need for flush mounting or armoring. Please accept our standard additional brake light	Photo enclosed	√	
Page 28/ Specifications	Ceiling mounted lights	Our standard is to mount the passenger dome lamps in our transition panel between the roof and sidewall. Please accept our standard dome light location	Photo enclosed	√	
Page 28/ Specifications	Engine cover mounted switch panel (or approved location)	Our default position is to mount the switch panel in a molded housing under the windshield trim. Please accept our standard switch panel	Photo enclosed	√	
Page 29/ Specifications	Floor Deck: ¾" FRP. Also Grade 5 bolts	We request using ¾" plywood with galvanized belly metal ILO FRP that is heavy and expensive. Also, we use a structural adhesive to bond the flooring to the floor frame members, then secure them temporarily with #14 self-threading screws that are no longer needed once the structural adhesive cures.	Photos are attached of the construction process.	√	
Page 29-30/ Specifications	RCA Rubber floor covering	Our standard floor covering is Tarabus. You show it as an option and we would like to provide it as standard. We will offer the four requested colors as standard	Photos enclosed	√	
Page 30/ Specifications	Curbview transition window – 40" High with 425 Sq. In. viewing area	Our curbview window is 39" high with 361 Sq. In. viewing area. Please accept our standard curbview window.	A print and picture are enclosed for your review.	√	

APPROVED EQUALS AGREEMENT

IFB 505-13-BB0001 14 Passenger Body on Chassis (BOC) Buses
IFB 505-13-BB0002 15 Passenger Body on Chassis (BOC) Buses
IFB 505-13-BB0003 19 Passenger Body on Chassis (BOC) Buses

SONNY MERRYMAN (STARCRAFT)

Page/Section	As Specified	Request	Remarks	Approved	Comments/Reason for Rejection
Page 30/ Specifications	Refers to seat track installation in the floor and on the sidewall.	Our normal build uses a formed "hat post" welded between the floor cross members. The hat post design is much stronger than flat steel and the HSLA seat track is skip welded to the hat post run front to rear each side. Our sidewall seat track is welded to each vertical structure piece in the sidewall rather than bolted. This results in additional structural value. Please accept our standard seat track installation		√	

The request for approved equals for the IFBs referenced above are approved if indicated with a check mark under the Approved column and will be accepted if submitted as part of a bid. Any request for equals that does not have a check mark under the Approved column is not approved as an equal and will not be accepted if submitted as part of a bid. The acceptance of an approved equal does not guarantee award of a contract.

Mark D. Roberts
Bidder's Signature

Ashley Nusbaum
Contract Officer's Signature

MARK D. ROBERTS, VP SALES
Bidder's Name and Title (printed)

Ashley Nusbaum
Contract Officer's Name (printed)

5-15-2013
Date

5/17/13
Date

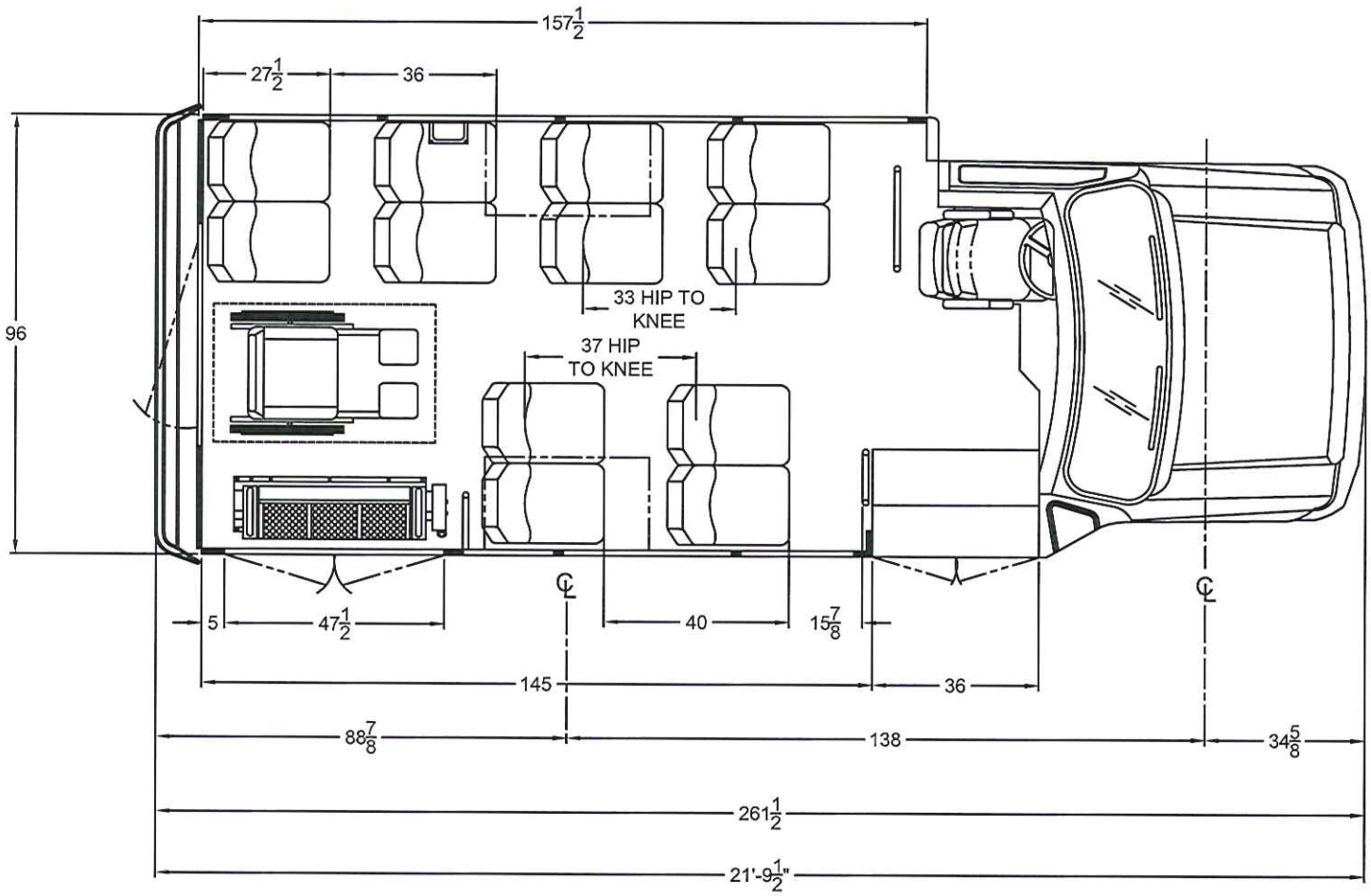

DEALER APPROVAL
☐ APPROVED
CUSTOMER SIGNATURE

E-350 11,500 GVWR

SCALE IN INCHES

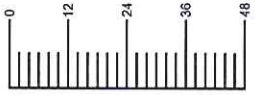

THIS DRAWING AND THE INFORMATION THEREON ARE THE EXCLUSIVE PROPERTY OF STARCRAFT BUS, A DIVISION OF FOREST RIVER. IT SHALL NOT BE COPIED OR DUPLICATED IN ANY MANNER, NOR SHALL IT BE SUBMITTED TO OUTSIDE PARTIES FOR EXAMINATION WITHOUT OUR WRITTEN CONCENT. IT IS LOANED FOR USE WITH REFERENCE TO WORK UNDER CONTRACT WITH, OR PROPOSALS SUBMITTED TO STARCRAFT BUS, A DIVISION OF FOREST RIVER.

REV. LET.	DESCRIPTION OF CHANGE	BY	CHK	DATE	ECN No.

TOLERANCE UNLESS OTHERWISE SPECIFIED		
WOOD	OTHER	
± 1/8"	± 1/16"	
± 1°	± 1/2°	

STARCRAFT BUS
a division of Forest River, Inc.

TITLE: 12/1 W/C PASS. 138" WB 20' ALLSTAR

DATE: 05/21/13

NAME: MDK

DWG. No. 12 1 WC 138 146 VA

WARRANTY INFORMATION

SONNY MERRYMAN, INC. WILL SERVE AS THE FIRST POINT OF CONTACT FOR ALL WARRANTY RELATED CONCERNS AND SERVICE SCHEDULING. SONNY MERRYMAN, INC. OFFERS SERVICE LOCATIONS IN LYNCHBURG (SERVING CENTRAL AND SOUTHWEST VIRGINIA), MANASSAS (SERVING NORTHERN VIRGINIA AND WASHINGTON, DC) AND CHESAPEAKE (SERVING TIDEWATER)

All chassis warranty work will be performed by a local Ford dealer with prior approval from Sonny Merryman, Inc.

All body and aftermarket warranty work will be performed by Sonny Merryman, Inc., or a local dealer with prior approval by Sonny Merryman, Inc.

CALL TOLL FREE: 800-533-1006

COMMONWEALTH OF VIRGINIA
DEPARTMENT OF MOTOR VEHICLES

CERTIFICATE NUMBER: 7325-1-I-0-7191

ISSUED: 11/18/2011
EXPIRES: 11/30/2013

THIS IS TO CERTIFY THAT: T/A SONNY MERRYMAN INC
5120 WARDS ROAD
EVINGTON VA 24550

IS HEREBY LICENSED AS PROVIDED IN THE VIRGINIA MOTOR VEHICLE DEALER BOARD LAWS, CHAPTER 15 TITLE 46.2, CODE OF VIRGINIA TO ENGAGE IN BUSINESS AS A FRANCHISED MOTOR VEHICLE DEALER DEALING IN NEW MOTOR VEHICLES AND HAS A FRANCHISE AGREEMENT WITH A MANUFACTURER OR DISTRIBUTOR FOR THE SALE OF NEW VEHICLES.

210
MVBVLR

DSD 1 (REV 2/10)

Commissioner, Department of Motor Vehicles
Chairman, Motor Vehicle Dealer Board

COMMONWEALTH OF VIRGINIA

DEPARTMENT OF MINORITY BUSINESS ENTERPRISE

1111 E. Main Street, Suite 300
Richmond, VA 23219

Sonny Merryman, Inc.

is a certified Small Business meeting all the eligibility requirements set forth under the Code of Virginia Section 2.2-1400 et seq. and Administrative Code, 7VAC 10-21 et seq.

Certification Number: 009485
Valid Through: October 15, 2013

Accordingly Certified

Ida Outlaw McPherson

Ida Outlaw McPherson, Director

CERTIFIED
SWaM Small, Women and Minority-Owned
Supplier Diversity Strengthens the Commonwealth
by the Virginia Department of Minority Business Enterprise

SARA REGISTRAR

Certificate of Registration

This is to certify the Quality Management System of:

STARCRAFT BUS

Location Addresses:

Commercial Bus
2367 Century Drive
Goshen, IN 46528

Federal Coach & School Bus
2408 Century Drive
Goshen, IN 46528

has been assessed and found to be in compliance
with the following Quality Standard:

ISO 9001:2008

The Quality Management System is applicable to

Design, Manufacturing, Sales, and Administration of Commercial, Government and School Buses

The Registration period is from
January 26, 2012 to January 25, 2015

This registration is subject to the company maintaining its system to the required standard which will be monitored by SARA Registrar.

Certificate Identification Number: **SARA-2006-CA-0031-03-A**

SARA Standards American Registrations Authority REGISTERED

IAF MEMBER OF MULTILATERAL RECOGNITION ARRANGEMENT

RvA MGMT. SYS. RvA C 465

President
Ph: 1-800-699-5870 Fax: 1-800-803-4818
1807D Santa Rita Road, #175
Pleasanton, CA 94566

FORD QUALITY VEHICLE MANUFACTURERS PROGRAM OVERALL RATING FORM

		MAXIMUM POINTS		FTQP COMMON
	QUALITY PLAN - PROGRAM COMMON			
D0100	Management Commitment	9	*	9.0
D0200	Employee Involvement	2		2.0
D0300	Engineering	11	*	11.0
D0400	Process Control	2	*	2.0
D0500	Quality Control	13	*	13.0
D0600	Completed Vehicle Sign-off	8	*	8.0
D0700	Customer Support	10		10.0
D0800	Manufacturing Environment	4		4.0
	Meets Quality Plan Minimum Requirements (Yes/No)		*	Yes
	Quality Plan Subtotal	59		59.0
	GENERAL CHASSIS - PROGRAM COMMON			
E0100	Heat Management	0	*	0.0
E0200	Climate Control - Heat & Air Cond.	9	*	9.0
E0300	Wheels and Tires	2	*	2.0
E0400	Steering and Suspension	0	*	0.0
E0500	Brakes	0	*	0.0
E0600	Powertrain - Engine/Transmission/Axles	0	*	0.0
E0700	Fuel System	0	*	0.0
E0800	Exhaust System	0	*	0.0
E0900	Frame	2	*	2.0
E1000	Body and Seating	3	*	3.0
E1100	Electrical Systems	9	*	9.0
E1200	Material/General	1		1.0
	Meets General Chassis Minimum Requirements (Yes/No)		*	Yes
	General Chassis Subtotal	26		26.0
	Meets All Common Minimum Requirements (Yes/No)		*	No
	Common FTQP Program Subtotal	85		85.0
	UNIQUE INDUSTRY MODIFICATIONS			FTQP UNIQUE
MH-	Motor Home and Transit Bus	13	*	13.0
	Meets Unique Minimum Requirements (Yes/No)		*	Yes

TOTAL COMMON AND UNIQUE		
Meets All Common & Unique Minimum Requirements (Yes/No)		No
Total Score (Maximum Possible):	98	98.0
Minimum Qualifying Score Required: (85% of Maximum Possible)	83.3	100.0%

*** = One or more minimum requirements in this section**

COMPANY Forest River, Inc. DATE April 2, 2013

DIVISION Starcraft Bus

LOCATION 2367 Century Drive, Goshen, Indiana 46528-5002

PRODUCTS Mid-Size Buses including School Buses.

CHASSIS USED E-350 and E-450 cutaways, and F-550 and F-650

CONTACT NAME Larry Hall TELEPHONE (574) 642-3112 FAX (574) 642-4835

SIGNATURE E-MAIL lhall@forestriverinc.com

QVM REMARKS AND OVERALL ASSESSMENT

Starcraft Bus continues to "fully Meet" the requirements of Ford's QVM Program.

Starcraft has sold the Federal brand to Champion (Thor).

OVERALL ASSESSMENT

FM

FINAL RATING (FM, P, NQ)

CODE	REQUIREMENTS
FM	Fully Meets all the program minimum requirements including minimum qualifying score.
P	Pending - Program status is pending completion of documentation.
NQ	Not Qualified - Considered to have major deficiencies in meeting the program requirements. Not considered an active program participant.

INSPECTION LEADER James O. Bartlett

INSPECTION ENGINEER

QVM PROGRAM MANAGER J. R. Murray

U.S. Department
Of Transportation
Federal Transit
Administration

Headquarters

Office of Civil Rights
1200 New Jersey Avenue SE
Washington, DC 20590

October 31, 2012

David Wright, General Manager
Starcraft Bus
2367 Century Drive
Goshen, IN 46528

TVM DBE Goal Approval—Fiscal Year 2013

Dear Mr. Wright:

This letter is to inform you that the Federal Transit Administration's ("FTA") Office of Civil Rights ("TCR") has received Starcraft Bus's Disadvantaged Business Enterprise ("DBE") Goal and Methodology for FY2013. This submission is required pursuant to the Moving Ahead for Progress in the 21st Century Act (MAP-21) and 49 CFR Part 26, "Participation by Disadvantaged Business Enterprises in Department of Transportation Programs" and must be implemented in good faith.

We have reviewed your DBE Goal and determined that it is compliant with the U.S. Department of Transportation's DBE regulations for the period of October 1, 2012—September 20, 2013. **You are now eligible to bid on FTA funded transit contracts. Please present this approval to FTA recipients prior to bidding on FTA funded procurements.**

The Federal Transit Administration reserves the right to remove/suspend this approval if your DBE Program or FY2013 DBE Goal is not implemented in good faith. In accordance with this good faith, you must to submit your DBE Uniform Report in the DOORS system by December 1, 2012. This report should reflect all FTA funded contracting activity for the second period in FY2012 (i.e. from April 1 – September 30).

Please also be mindful that your FY2014 DBE Goal Methodology must be submitted to FTA by August 1, 2013. Therefore, you should publish your goal on or before June 12, 2013. Thank you for your cooperation. If you have any questions regarding this approval, please contact Jonathan Ocana at (202)493-0314 or via email jonathan.ocana@dot.gov.

Sincerely,

Marci Malaster
Acting Division Chief, Headquarters

cc: Joe Goeglein, Starcraft, DBELO (Via Email)

STARCRAFT BUS
a division of Forest River, Inc.

FEDERAL Coach

FMVSS/CMVSS Compliance Summary 2013-2014 Commercial Only

The following information describes briefly the C/FMVSS standards and the Compliance Action that has been taken by either Starcraft Bus Commercial Division, the chassis manufacturer.

C/FMVSS No.	Standard Description	Compliance Action
101	Control Location, Identification and Illumination	Starcraft does not alter the OEM controls or displays. Any aftermarket seats and/or controls or displays subject to the standard meet this standard. Test data on file.
102	Transmission Shift Lever Sequence, Starter Interlock & Transmission Braking Effect	Compliance is deferred to the chassis manufacturer.
103	Windshield Defrosting & Defogging Systems	Compliance is deferred to the chassis manufacturer.
104	Windshield Wiping & Washing Systems	Compliance is deferred to the chassis manufacturer.
105	Hydraulic Brake Systems	Test data kept on file for vehicles that have had the frame stretched, or have had other system modifications. For Non-stretched vehicles compliance is deferred to the chassis manufacturer.
106	Brake Hoses	Vehicles with stretched frames have additional lines installed by chassis modifiers using OEM components. Other vehicles that have had system modifications use OEM or OEM-approved components and are tested for compliance. For Non-stretched vehicles compliance is deferred to the chassis manufacturer.
108	Lamps, Reflective Devices & Associated Equipment	Starcraft does not alter OEM lighting. Additional lighting to include brake, turn, clearance and reverse lamps meet standard. Data on file.
108.1	Alternative Requirements for Headlamps	Starcraft does not alter OEM lighting. Compliance is deferred to the chassis manufacturer.
110	Tire Selection and Rim for Motor Vehicles with a GVWR of 4,536kg (10,000 lbs.) or Less	Starcraft does not manufacture vehicles with a GVWR of 4,536kg (10,000 lbs.) or Less.
111	Rear View Mirrors	All aftermarket mirrors installed by Starcraft meet this standard and DOT regulations. Data on file.
112	Headlamp Concealment Devices	Starcraft does not manufacture vehicles with headlamp concealment devices.
113	Hood latch systems	Compliance is deferred to the chassis manufacturer.
114	Theft Protection	Compliance is deferred to the chassis manufacturer.
115	Vehicle Identification Number	Compliance is deferred to the chassis manufacturer.
116	Hydraulic Brake Fluids	Starcraft does not alter brake systems. Vehicles with stretched frames have additional fluid added by chassis modifiers using OEM instruction and materials. All other system modifications utilize only OEM-approved fluid. For Non-stretched vehicles compliance is deferred to the chassis manufacturer.
118	Power Operated Window, Partition, and Roof Panel Systems	Compliance is deferred to the chassis manufacturer.
120	Tire Selection and Rim for Motor Vehicles with a GVWR of 4,536kg (10,000 lbs.) or More	Compliance is deferred to the chassis manufacturer.
121	Air Brake Systems	All vehicles manufactured by Starcraft that are equipped with air brake systems have no modifications made to the air brake system as supplied by the chassis manufacturer. Compliance is deferred to the chassis manufacturer.
124	Accelerator Control Systems	Starcraft does not alter the OEM accelerator system, with the exception of the addition of aftermarket fast idle systems on some vehicles. These systems meet this standard when installed in accordance with instructions.
125	Warning Devices	All vehicles manufactured by Starcraft that are equipped with aftermarket (3) triangle kit meet this standard.
131	School Bus Pedestrian Safety Devices	All vehicles manufactured by Starcraft are not completed to be used as school buses.
135	Light Vehicle Brake System with a GVWR of 3,500kg (7,716lbs.) or Less	Starcraft does not manufacture vehicles with a GVWR of 3,500kg (7,716 lbs.) or Less.
201	Occupant Protection in Interior Impact	All vehicles applicable to the standard (under 10,000 lbs.) do not have alterations made that affect the compliance to this standard. Compliance is deferred to the chassis manufacturer.
202	Head Restraints	All vehicles applicable to the standard (under 10,000 lbs.) have seating installed that meets this standard. Compliance is deferred to the chassis manufacturer.

STARCRAFT BUS
a division of Forest River, Inc.

FEDERAL Coach

FMVSS/CMVSS Compliance Summary 2013-2014 **Commercial Only**

The following information describes briefly the C/FMVSS standards and the Compliance Action that has been taken by either Starcraft Bus Commercial Division, the chassis manufacturer.

203	Impact Protection for the Driver from the Steering Control System	Compliance is deferred to the chassis manufacturer.
204	Steering Control Rearward Displacement	Compliance is deferred to the chassis manufacturer.
205	Glazing Materials	No modifications are made to the OEM Glazing materials. Additional glazing materials meet the standard. Data on file.
206	Door Locks and Door Retention Devices	All vehicles manufactured by Starcraft (non-buses) that are subject to this standard have no modifications made which affect compliance to the standard. Compliance is deferred to the chassis manufacturer.
207	Seating System	All seating installed by Starcraft meets this standard. Test data on file.
208	Occupant Crash Protection	No alterations are made to the OEM seat belts, air bag systems or associated hardware. Any seat belt systems added meet the standard. Test data on file.
209	Seat Belt Assemblies	No alterations are made to the OEM seat belts or associated hardware. Any seat belt systems added meet the standard. Test data on file.
210	Seat Belt Assembly Anchorage	No alterations are made to the OEM seat belts or associated hardware. Seat belt systems and their installation meet the standard. Test data on file.
210.1	User-ready Tether Anchorages for Restraint System	No alterations are made to the OEM seat belts or associated hardware. Seat belt systems and their installation meet the standard. Data on file.
210.2	Lower Universal Anchorage Systems for Restraint Systems and Booster Cushions	No alterations are made to the OEM seat belts or associated hardware. Seat belt systems and their installation meet the standard. Data on file.
212	Windshield Mounting	Compliance is deferred to the chassis manufacturer.
213	Child Restraint Systems	Vehicles manufactured by Starcraft that are subject to this standard (under 10,000 lbs.) have seating installed that meets this standard. Test data on file.
213.4	Built-in Child Restraint Systems and Built-in Booster Cushions	Vehicles manufactured by Starcraft that are subject to this standard (under 10,000 lbs.) have seating installed that meets this standard. Test data on file.
214	Side Impact Protection with a GVWR of 4,536kg (10,000 lbs.) or Less	Starcraft does not manufacture vehicles with a GVWR of 4,536kg (10,000 lbs.) or Less
216	Roof Crush Resistance	Starcraft does not manufacture vehicles that are subject to this standard.
217	Bus Window Retention and Release	No modifications are made to the OEM windows. Additional windows meet the standard. Test data on file.
219	Windshield Zone Intrusion	Compliance is deferred to the chassis manufacturer.
220	School Bus Rollover Testing	All vehicles manufactured by Starcraft are not completed to be used as school buses, however, Starcraft does test vehicles to meet standard.
221	School Bus Body Joint Strength	All vehicles manufactured by Starcraft are not completed to be used as school buses, however, Starcraft does test vehicles to meet standard.
222	School Bus Passenger Seating and Crash Protection	All vehicles manufactured by Starcraft are not completed to be used as school buses.
225	Child Restraint Anchorage Systems	Vehicles manufactured by Starcraft that are subject to this standard (under 10,000 lbs.) have seating installed that meets this standard.
301	Fuel System Integrity	Compliance is deferred to the chassis manufacturer.
301.1	LPG Fuel System Integrity	Compliance is deferred to the chassis manufacturer.
301.2	CNG Fuel System Integrity	Compliance is deferred to the chassis manufacturer.

STARCRAFT BUS
a division of Forest River, Inc.

FEDERAL Coach

FMVSS/CMVSS Compliance Summary 2013-2014 **Commercial Only**

The following information describes briefly the C/FMVSS standards and the Compliance Action that has been taken by either Starcraft Bus Commercial Division, the chassis manufacturer.

302	Flammability of Interior Materials	Materials installed in the interior of Starcraft products meet the standard. Test data on file.
303	Fuel System Integrity of Compressed Natural Gas Systems	Starcraft does not typically produce vehicles with CNG systems. All vehicles equipped with CNG systems exceed the applicability (10,000 lbs. or less) of this standard.
304	Compressed Natural Gas Fuel Container Integrity	Starcraft does not typically produce vehicles with CNG systems. All vehicles equipped with CNG systems exceed the applicability (10,000 lbs. or less) of this standard.
305	Electrolyte Spillage and Electrical Shock Protection	Starcraft does not produce vehicles that use electricity as propulsion power.
403	Platform Lift System for Motor Vehicles	Starcraft does not alter the platform lift system. Starcraft install lift system in strict compliance with the manufacturers installation instructions. Starcraft meets strength requirements. Test data on file.
404	Platform Lift Installation on Motor Vehicles	Compliance is deferred to the lift manufacturer.
1106	Noise Emissions	Starcraft does not alter the OEM Chassis in the area which is stated in the incomplete vehicle documents. Data on file.

Signed: _____ Date: 8/22/2012

Title: Director Of Engineering

ATTACHMENT F

DEPARTMENT OF MINORITY BUSINESS ENTERPRISE (DMBE)
SMALL BUSINESS SUBCONTRACTING PLAN

All small businesses must be certified by the Commonwealth of Virginia, Department of Minority Business Enterprise (DMBE) to participate in the SWAM program. Certification applications are available through DMBE online at www.dmbe.virginia.gov (Customer Service).

Definitions

"Small business" means a business, independently owned and controlled by one or more individuals who are U.S. citizens or legal resident aliens, and together with affiliates, has 250 or fewer employees, or average annual gross receipts of $10 million or less averaged over the previous three years. One or more of the individual owners shall control both the management and daily business operations of the small business.
(*Code of Virginia*, § 2.2-4310)

"Women-owned business" means a business that is at least 51% owned by one or more women who are U.S. citizens or legal resident aliens, or in the case of a corporation, partnership, or limited liability company or other entity, at least 51% of the equity ownership interest is owned by one or more women who are U.S. citizens or legal resident aliens, and both the management and daily business operations are controlled by one or more women.
(*Code of Virginia*, § 2.2-4310)

"Minority-owned business" means a business that is at least 51% owned by one or more minority individuals who are U.S. citizens or legal resident aliens, or in the case of a corporation, partnership, or limited liability company or other entity, at least 51% of the equity ownership interest in the corporation, partnership, or limited liability company or other entity is owned by one or more minority individuals who are U.S. citizens or legal resident aliens, and both the management and daily business operations are controlled by one or more minority individuals.
(*Code of Virginia*, § 2.2-4310)

Bidder Name: SONNY MERRYMAN, INC.

Preparer Name: MARK D. ROBERTS **Date:** 5/23/2013

Instructions

A. If the Bidder is certified by DMBE as a small business, complete only Section A of this form. This shall not exclude DMBE-certified women-owned and minority-owned businesses when they have received DMBE small business certification.

B. If the Bidder is not a DMBE-certified small business, complete Section B of this form. For the bid to be considered and the bidder to be declared responsive, the bidder shall identify the portions of the contract that will be subcontracted to DMBE-certified small business in Section B.

Section A

If the Bidder is certified by DMBE, the Bidder is certified as a (**check only one below**):

__X__ Small Business

_____ Small and Women-owned Business

_____ Small and Minority-owned Business

Certification number: 9485 Certification date: EXPIRES 10/15/2013

Section B

Populate the table below to show the firm's plans for utilization of DMBE-certified small businesses in the performance of this contract. This shall include DMBE-certified women-owned and minority-owned businesses that meet the small business definition and have received the DMBE small business certification. Include plans to utilize small businesses as part of joint ventures, partnerships, subcontractors, suppliers, etc.

B. Plans for Utilization of DMBE-Certified Small Businesses for this Procurement

Small Business Name & Address **DMBE Certificate #**	**Status if Small Business is also: Women (W), Minority (M)**	**Contact Person, Telephone & Email**	**Type of Goods and/or Services**	**Planned Contract Involvement**	**Planned Annual Contract Dollar Expenditure Amount**
Totals $					

Page Left Blank Intentionally

ATTACHMENT G

VENDOR DATA SHEET

Note: The following information is required as part of the Bidder's response to this solicitation. Failure to complete and provide this sheet may result in finding the bid nonresponsive. (In the case of a two-step IFB, it may cause the proposal portion to be determined to be not acceptable.)

1. **Qualification:** The vendor must have the capability and capacity in all respects to satisfy fully all of the contractual requirements.

2. **Vendor's Primary Contact:**

   Name: Mark D. Roberts Phone: 800-533-1006 x311

3. **Years in Business:** Indicate the length of time the Bidder has been in business providing this type of good or service:

   45 Years 4 Months

4. **Vendor Information:** VA Vendor ID or DUNS Number: 01-005-3718

5. Indicate below a listing of at least four current or recent accounts, either commercial or governmental, that the Bidder is servicing, has serviced, or has provided similar goods. Include the length of service and the name, address, and telephone number of the point of contact.

   A. Company: DRPT Contact: NEIL SHERMAN
   Phone: (804) 786-1154 Fax: (804) 225-3752
   Project: STATEWIDE TRANSIT CONTRACTS
   Dates of Service: 1995-PRESENT $ Value: $15,000,000.00+

   B. Company: GRTC Contact: CHARLIE MITCHELL
   Phone: (804) 358-3871 Fax: (804) 342-1933
   Project: TRANSIT EQUIPMENT
   Dates of Service: 2000-PRESENT $ Value: $3,000,000.00+

   C. Company: WMATA Contact: DON SCRUGGS
   Phone: (202) 962-1234 Fax: ( )
   Project: PARATRANSIT VANS
   Dates of Service: 2007-PRESENT $ Value: $10,000,000.00+

   D. Company: CAPITAL REGION AIRPORT COMM Contact: FOLGER TUCK
   Phone: (804) 226-3000 Fax: (804) 652-2605
   Project: PARKING SHUTTLE BUSES
   Dates of Service: 2003-PRESENT $ Value: $1,000,000.00+

I certify the accuracy of this information.

Signed: Title: VP SALES Date: 5/23/2013

Page Left Blank Intentionally

ATTACHMENT H

Agencies Funded by DRPT

A Grace Place Adult Care Center
Accomack Northampton TDC
Adult Care Service
Adult Day Care of Martinsville and Henry Counties
Alexandria Transit
American Emergency Vehicles
American Red Cross
Appalachian Agency for Senior Citizens
ARC of Greater Prince William
Arc of the Virginia Peninsula
Arlington County
Bay Aging, Inc.
Bedford County
Beth Sholom Home
Blacksburg Transit
Blue Ridge Opportunity Services
Bon Secours Senior Health
Bristol Virginia Transit
Buchanan County Transportation
CAPUP
Central Shenandoah Planning District Commission
Central Virginia Area Agency on Aging, Inc.
Chesapeake Service Systems
Chesterfield Community Services Board
Chesterfield County
City of Alexandria
City of Bristol, Tennessee
City of Charlottesville
City of Danville
City of Fairfax
City of Falls Church
City of Fredericksburg
City of Harrisonburg
City of Kingsport
City of Lynchburg
City of Martinsville
City of Radford
City of Richmond
City of Staunton
City of Virginia Beach
City of Williamsburg
Community Association for Rural Transportation, Inc.
Community Transportation Association of Virginia
Crater District Area Agency On Aging /FGP
Crater Planning District Commission
Crossroads Community Services
Cumberland County
Daily Planet Health Care for Homeless
Danville City Parks and Recreation Department
Danville-Pittsylvania Community Services
Dickenson County Transportation
District III Public Transit
Dulles Area Transportation Association
Eastern Shore Community Services Board
ECHO.INC
ElderHomes Corporation
ESAAA/CAA
Essex County
Fairfax County
Farmville Area Bus
Friendship Industries, Inc.
George Washington Regional Commission
Giles Health & Family Center
Gloucester County
Goochland Fellowship and Family Service
Goodwill Industries of the Valleys
Grafton School, Inc.
Greater Lynchburg Transit Company
Greater Richmond Transit Company
Greater Roanoke Transit Company
Greene County
Greensville Adult Activity Services
Hampton Roads Planning District Commission
Hampton-Newport News Community Services Board
Hanover Community Services
Henrico Area MH/MR Services
Historic Triangle Senior Center
Hope House Foundation
Hopewell Redevelopment and Housing Authority
Intelligent Transportation Society of Virginia
James City County
JAUNT, Inc.
Jewish Community Center of Northern Virginia
Junction Center for Independent Living
Lake Country Area Agency on Aging
Loudoun County
Lynchburg Community Action Group, Inc.
Metropolitan Washington Airports Authority
Metropolitan Washington Council of Governments
Middle Peninsula Planning District Commission
Middle Peninsula-Northern Neck CSB
Montgomery County
Mount Rogers Community Services Board
Mountain Empire Older Citizens
New River Valley Community Services Board
New River Valley Planning District Commission
New River Valley Senior Services - Pulaski Area Transit
Northern Neck Planning District Commission
Northern Shenandoah Valley Regional Commission
Northern Virginia Transportation Commission
Northwestern Community Services Board
NuRide, Inc.

Northern Virginia Regional Commission
PARC Workshop, Inc.
Peninsula Agency on Aging
Petersburg Area Transit
Piedmont Community Services Board
Pleasant View, Inc.
Portco, Inc.
Potomac and Rappahannock Transportation Commission
Prince William County
Quin Rivers Agency for Community Action, Inc.
Rappahannock Area Agency on Aging
Rappahannock Area Community Services Board
Rappahannock-Rapidan Area Agency on Aging
Rappahannock-Rapidan Community Services Board
Rappahannock-Rapidan Planning District Commission
Resort Area Transportation Management Association
Richmond Area ARC
Richmond Community Action Program
Richmond Planning District Commission
Richmond Redevelopment and Housing Authority
Richmond Residential Services
Ridefinders
Roanoke County
Roanoke Valley-Alleghany Regional Commission
Rockbridge Area Community Services Board
Rockbridge Area Occupational Center, Inc.
Rockbridge Area Transportation System, Inc.
Rockbridge County
Rockingham County
Russell County Public Transportation
Senior Services of Southeastern Virginia
Shenandoah Area Agency on Aging, Inc.
Shen-Paco Industries, Inc.
Southern Area Agency on Aging
Southside Community Services Board
St. Joseph's Villa
Stepping Stones, Inc.
STEPS, Inc.
Sussex-Greensville-Emporia Adult Activity Services
Tazewell County
The Arc of Central Virginia
The Arc of Greater Prince William
The Arc of Harrisonburg/Rockingham
Thomas Jefferson Planning District Commission
Town of Altavista
Town of Ashland
Town of Blackstone
Town of Bluefield - Graham Transit
Town of Chincoteague
Town of Haymarket
Town of Herndon
Town of Kenbridge
Town of Orange
Town of Purcellville
Town of South Hill
Town of Victoria
Town of Warrenton
Town of West Point
Transportation District Commission of Hampton Road
Tysons Transportation Association, Inc.
UHSTS, Inc. - RADAR
Valley Program for Aging Services, Inc.
Vector Industries, Inc.
Virginia Port Authority
Virginia Rail Policy Institute
Virginia Regional Transportation Association
Virginia Transit Association
Virginias Region 2000 Local Government Council
West Piedmont Planning District Commission
Western Tidewater Community Services Board
Williamsburg Area Transit Authority
Winchester Transit
Wise County
Washington Metropolitan Area Transit Authority
Washington Metropolitan Area Transit Commission

ATTACHMENT I

State Corporation Commission Form

Virginia State Corporation Commission (SCC) registration information. The Bidder:

☒ is a corporation or other business entity with the following SCC identification number: 01190916-4 **-OR-**

☐ is not a corporation, limited liability company, limited partnership, registered limited liability partnership, or business trust **-OR-**

☐ is an out-of-state business entity that does not regularly and continuously maintain as part of its ordinary and customary business any employees, agents, offices, facilities, or inventories in Virginia (not counting any employees or agents in Virginia who merely solicit orders that require acceptance outside Virginia before they become contracts, and not counting any incidental presence of the Bidder in Virginia that is needed in order to assemble, maintain, and repair goods in accordance with the contracts by which such goods were sold and shipped into Virginia from Bidder's out-of-state location) **-OR-**

☐ is an out-of-state business entity that is including with this bid an opinion of legal counsel which accurately and completely discloses the undersigned Bidder's current contacts with Virginia and describes why those contacts do not constitute the transaction of business in Virginia within the meaning of § 13.1-757 or other similar provisions in Titles 13.1 or 50 of the Code of Virginia.

****NOTE**** >> Check the following box if you have not completed any of the foregoing options but currently have pending before the SCC an application for authority to transact business in the Commonwealth of Virginia and wish to be considered for a waiver to allow you to submit the SCC identification number after the due date for bids (DRPT reserves the right to determine in its sole discretion whether to allow such waiver): ☐

Page Left Blank Intentionally

ATTACHMENT J

FEDERAL CONDITIONS OF MANUFACTURER/VENDOR

1. BUY AMERICA REQUIREMENTS
49 U.S.C. 5323(j)
49 C.F.R. pt. 661

The Buy America regulation, at 49 C.F.R. pt. 661.13, requires notification of the Buy America requirements in Federal Transit Administration (FTA)-funded contracts, but does not specify the language to be used. The following language has been developed by FTA.

Buy America - The contractor agrees to comply with 49 U.S.C. § 5323(j) and 49 C.F.R. pt. 661, which provide that Federal funds may not be obligated unless steel, iron, and manufactured products used in FTA-funded projects are produced in the United States, unless a waiver has been granted by FTA or the product is subject to a general waiver. General waivers are listed in 49 C.F.R. pt. 661.7, and include final assembly in the United States for 15 passenger vans and 15 passenger wagons produced by Chrysler Corporation, and microcomputer equipment and software. Separate requirements for rolling stock are set out at 49 U.S.C. § 5323(j)(2)(C) and 49 C.F.R. pt. 661.11. Rolling stock must be assembled in the United States and have a 60 percent domestic content.

A Bidder must submit to the FTA recipient the appropriate Buy America certification (below) with all bids on FTA-funded contracts, except those subject to a general waiver. Bids that are not accompanied by a completed Buy America certification must be rejected as nonresponsive. This requirement does not apply to lower tier subcontractors.

The Manufacturer must submit with the proposal the proposed component and sub-components parts of the vehicle identified by manufacturer, country of origin, and cost; and the proposed location of the final activity point for the buses, including a description of the activities that will take place at the final assembly point and cost of final assembly.

Certification requirement for procurement of steel, iron, or manufactured products.

Certificate of Compliance with 49 U.S.C. § 5323(j)(1)

The Bidder hereby certifies that it will meet the requirements of 49 U.S.C. § 5323(j)(1) and the applicable regulations in 49 C.F.R. pt. 661.5.

Date 5/23/2013

Signature

Company Name SONNY MERRYMAN, INC.

Title VP SALES

Certification requirement for procurement of steel, iron, or manufactured products.

Certificate of Non-Compliance *with 49 U.S.C. § 5323(j)(1)*

The Bidder hereby certifies that it cannot comply with the requirements of 49 U.S.C. § 5323(j)(1) and 49 C.F.R. pt. 661.5, but it may qualify for an exception pursuant to 49 U.S.C. §§ 5323(j)(2)(A), 5323(j)(2)(B), or 5323(j)(2)(D), and 49 C.F.R. pt. 661.7.

Date _____

Signature _____

Company Name _____

Title _____

Certification requirement for procurement of buses, other rolling stock and associated equipment.

Certificate of Compliance *with 49 U.S.C. § 5323(j)(2)(C).*

The Bidder hereby certifies that it will comply with the requirements of 49 U.S.C. § 5323(j)(2)(C) and the regulations at 49 C.F.R. pt. 661.11.

Date 5/23/2013

Signature _____

Company Name SONNY MERRYMAN, INC.

Title VP SALES

Certificate of Non-Compliance *with 49 U.S.C. § 5323(j)(2)(C)*

The Bidder hereby certifies that it cannot comply with the requirements of 49 U.S.C. § 5323(j)(2)(C) and 49 C.F.R. pt. 661.11, but may qualify for an exception pursuant to 49 U.S.C. §§ 5323(j)(2)(A), 5323(j)(2)(B), or 5323(j)(2)(D), and 49 C.F.R. pt. 661.7.

Date _____

Signature _____

Company Name _____

Title _____

2. CARGO PREFERENCE REQUIREMENTS
46 U.S.C. App.1241
46 C.F.R. pt. 381

Cargo Preference - Use of United States-Flag Vessels - The contractor agrees:
a) **to use** privately owned United States-Flag commercial vessels to ship at least 50 percent of the gross tonnage (computed separately for dry bulk carriers, dry cargo liners, and tankers) involved, whenever shipping any equipment, material, or commodities pursuant to the underlying contract to the extent such vessels are available at fair and reasonable rates for United States-Flag commercial vessels;
b) **to furnish within** 20 working days following the date of loading for shipments originating within the United States or within 30 working days following the date of leading for shipments originating outside the United States, a legible copy of a rated, "on-board" commercial ocean bill-of -lading in English for each shipment of cargo **described in the preceding paragraph** to the Division of National Cargo, Office of Market Development, Maritime Administration, Washington, DC 20590 and to the FTA recipient **(through the contractor in the case of a subcontractor's bill-of-lading)**.
c) **to include these** requirements in **all subcontracts issued pursuant to this contract when the subcontract may involve the transport of equipment, material, or commodities by ocean vessel.**

3. ENERGY CONSERVATION REQUIREMENTS
42 U.S.C. § 6321 *et seq.*
49 C.F.R. pt. 18

Energy Conservation - The contractor agrees to comply with mandatory standards and policies relating to energy efficiency which are contained in the state energy conservation plan issued in compliance with the Energy Policy and Conservation Act.

4. CLEAN WATER REQUIREMENTS
33 U.S.C. § 1251

Clean Water - (1) The Contractor agrees to comply with all applicable standards, orders or regulations issued pursuant to the Federal Water Pollution Control Act, as amended, 33 U.S.C. § 1251 *et seq.* The Contractor agrees to report each violation to the Purchaser and understands and agrees that the Purchaser will, in turn, report each violation as required to assure notification to FTA and the appropriate Environmental Protection Agency (EPA) Regional Office.
(2) The Contractor also agrees to include these requirements in each subcontract exceeding $100,000 financed in whole or in part with Federal assistance provided by FTA.

5. BUS TESTING
49 U.S.C. § 5318(c)
49 C.F.R.pt. 665, App. A

Bus Testing - The Contractor [Manufacturer] SONNY MERRYMAN, INC. FOR manufacturer agrees to comply with 49 U.S.C. § 5318(c) and FTA's implementing regulation at 49 C.F.R. pt. 665 and shall perform the following:

1) A manufacturer of a new bus model or a bus produced with a major change in components or configuration shall provide a copy of the final test report to the recipient at a point in the procurement process specified by the recipient which will be prior to the recipient's final acceptance of the first vehicle.

2) A manufacturer who releases a report under paragraph 1 above shall provide notice to the operator of the testing facility that the report is available to the public.

3) If the manufacturer represents that the vehicle was previously tested, the vehicle being sold should have the identical configuration and major components as the vehicle in the test report, which must be provided to the recipient prior to recipient's final acceptance of the first vehicle. If the configuration or components are not identical, the manufacturer shall provide a description of the change and the manufacturer's basis for concluding that it is not a major change requiring additional testing.

4) If the manufacturer represents that the vehicle is "grandfathered" (has been used in mass transit service in the United States before October 1, 1988, and is currently being produced without a major change in configuration or components), the manufacturer shall provide the name and address of the recipient of such a vehicle and the details of that vehicle's configuration and major components.

The Manufacturer must submit with the proposal Bus Testing Certificate and the Bus Testing Report.

CERTIFICATION OF COMPLIANCE WITH FTA'S BUS TESTING REQUIREMENTS

The undersigned [Contractor/Manufacturer] certifies that the vehicle offered in this procurement complies with 49 U.S.C. § 5318(e) and FTA's implementing regulation at 49 C.F.R.pt. 665. The undersigned understands that misrepresenting the testing status of a vehicle acquired with Federal financial assistance may subject the undersigned to civil penalties as outlined in the Department of Transportation's regulation on Program Fraud Civil Remedies, 49 C.F.R. pt. 31. In addition, the undersigned understands that FTA may suspend or debar a manufacturer under the procedures in 2 C.F.R. pt. 1200.

Date: 5/23/2013

Signature: [signature]

Company Name: SONNY MERRYMAN, INC.

Title: VP SALES

6. PRE-AWARD AND POST DELIVERY AUDITS REQUIREMENTS
49 U.S.C. 5323
49 C.F.R. pt. 663

- Buy America certification is mandated under FTA regulation, "Pre-Award and Post-Delivery Audits of Rolling Stock Purchases," 49 C.F.R. pt. 663.13.

- Specific language for the Buy America certification is mandated by FTA regulation, "Buy America Requirements--Surface Transportation Assistance Act of 1982, as amended," 49 C.F.R. pt. 661.12, but has been modified to include FTA's Buy America requirements codified at 49 U.S.C. § 5323(j).

Pre-Award and Post-Delivery Audit Requirements - The Contractor agrees to comply with 49 U.S.C. § 5323(d)(l) and FTA's implementing regulation at 49 C.F.R. pt. 663 and to submit the following certifications:

(1) Buy America Requirements: The Contractor shall complete and submit a declaration certifying either compliance or noncompliance with Buy America. If the Bidder certifies compliance with Buy America, it shall submit documentation which lists 1) component and subcomponent parts of the rolling stock to be purchased identified by manufacturer of the parts, their country of origin and costs; and 2) the location of the final assembly point for the rolling stock, including a description of the activities that will take place at the final assembly point and the cost of final assembly.

(2) Solicitation Specification Requirements: The Contractor shall submit evidence that it will be capable of meeting the bid specifications.

(3) Federal Motor Vehicle Safety Standards (FMVSS): The Contractor shall submit 1) manufacturer's FMVSS self-certification sticker information that the vehicle complies with relevant FMVSS or 2) manufacturer's certified statement that the contracted buses will not be subject to FMVSS regulations.

BUY AMERICA CERTIFICATE OF COMPLIANCE WITH FTA REQUIREMENTS FOR BUSES, OTHER ROLLING STOCK, OR ASSOCIATED EQUIPMENT

(To be submitted with a bid exceeding the small purchase threshold for Federal assistance programs, currently set at $100,000)

Certificate of Compliance

The Bidder hereby certifies that it will comply with the requirements of 49 U.S.C. § 5323(j)(2)(C), § 165(b)(3) of the Surface Transportation Assistance Act of 1982, as amended, and the regulations of 49 C.F.R. pt. 661.11:

Date: 5/23/2013

Signature: Mark O. Roberts

Company Name: SONNY MERRYMAN, INC.

Title: VP SALES

Certificate of Non-Compliance

The Bidder hereby certifies that it cannot comply with the requirements of 49 U.S.C. § 5323(j)(2)(C) and § 165(b)(3) of the Surface Transportation Assistance Act of 1982, as amended, but may qualify for an exception to the requirements consistent with 49 U.S.C. §§ 5323(j)(2)(B) or (j)(2)(D), 165(b)(2) or (b)(4) of the Surface Transportation Assistance Act, as amended, and regulations in 49 C.F.R. pt. 661.7.

Date: _____

Signature: _____

Company Name: _____

Title: _____

7. LOBBYING
31 U.S.C. § 1352
49 C.F.R. pt. 19
49 C.F.R. pt. 20

- Lobbying Certification and Disclosure of Lobbying Activities for third party contractors are mandated by 31 U.S.C. § 1352(b)(5), as amended by § 10 of the Lobbying Disclosure Act of 1995, and Department of Transportation (DOT) implementing regulation, "New Restrictions on Lobbying," at 49 C.F.R. § 20.110(d)

- Language in Lobbying Certification is mandated by 49 C.F.R. pt. 19, Appendix A, Section 7, which provides that contractors file the certification required by 49 C.F.R. pt. 20, Appendix A.

Modifications have been made to the Lobbying Certification pursuant to Section 10 of the Lobbying Disclosure Act of 1995.

- Use of "Disclosure of Lobbying Activities," Standard Form-LLL set forth in Appendix B of 49 C.F.R. pt. 20, as amended by "Government Wide Guidance For New Restrictions on Lobbying," 61 Fed. Reg. 1413 (1/19/96) is mandated by 49 C.F.R. pt. 20, Appendix A.

Byrd Anti-Lobbying Amendment, 31 U.S.C. § 1352, as amended by the Lobbying Disclosure Act of 1995, 2 U.S.C. § 1601, *et seq.*] - Contractors who apply or bid for an award of $100,000 or more shall file the certification required by 49 C.F.R. pt. 20, "New Restrictions on Lobbying." Each tier certifies to the tier above that it will not and has not used Federal appropriated funds to pay any person or organization for influencing or attempting to influence an officer or employee of any agency, a member of Congress, officer or employee of Congress, or an employee of a member of Congress in connection with obtaining any Federal contract, grant or any other award covered by 31 U.S.C. § 1352. Each tier shall also disclose the name of any registrant under the Lobbying Disclosure Act of 1995 who has made lobbying contacts on its behalf with non-Federal funds with respect to that Federal contract, grant or award covered by 31 U.S.C. § 1352. Such disclosures are forwarded from tier to tier up to the recipient.

APPENDIX A, 49 C.F.R. pt. 20--CERTIFICATION REGARDING LOBBYING
Certification for Contracts, Grants, Loans, and Cooperative Agreements
(To be submitted with each bid exceeding $100,000)

The undersigned [Contractor] certifies, to the best of his or her knowledge and belief, that:
(1) No Federal appropriated funds have been paid or will be paid, by or on behalf of the undersigned, to any person for influencing or attempting to influence an officer or employee of an agency, a Member of Congress, an officer or employee of Congress, or an employee of a Member of Congress in connection with the awarding of any Federal contract, the making of any Federal grant, the making of any Federal loan, the entering into of any cooperative agreement, and the extension, continuation, renewal, amendment, or modification of any Federal contract, grant, loan, or cooperative agreement.

(2) If any funds other than Federal appropriated funds have been paid or will be paid to any person for making lobbying contacts to an officer or employee of any agency, a Member of Congress, an officer or employee of Congress, or an employee of a Member of Congress in connection with this Federal contract, grant, loan, or cooperative agreement, the undersigned shall complete and submit Standard Form--LLL, "Disclosure Form to Report Lobbying," in accordance with its instructions [as amended by "Government Wide Guidance for New Restrictions on Lobbying," 61 Fed. Reg. 1413 (1/19/96). Note: Language in paragraph (2) herein has been modified in accordance with Section10 of the Lobbying Disclosure Act of 1995, 2 U.S.C. § 1601, *et seq.*]
(3) The undersigned shall require that the language of this certification be included in the award documents for all subawards at all tiers (including subcontracts, subgrants, and contracts under grants, loans, and cooperative agreements) and that all subrecipients shall certify and disclose accordingly.

This certification is a material representation of fact upon which reliance was placed when this transaction was made or entered into. Submission of this certification is a prerequisite for making or entering into this transaction imposed by 31, U.S.C. § 1352 (as amended by the Lobbying Disclosure Act of 1995). Any person who fails to file the required certification shall be subject to a civil penalty of not less than $10,000 and not more than $100,000 for each such failure.
[Note: Pursuant to 31 U.S.C. § 1352(c)(1)-(2)(A), any person who makes a prohibited expenditure or fails to file or amend a required certification or disclosure form shall be subject to a civil penalty of not less than $10,000 and not more than $100,000 for each such expenditure or failure.]

The Contractor, SONNY MERRYMAN, INC. certifies or affirms the truthfulness and accuracy of each statement of its certification and disclosure, if any. In addition, the Contractor understands and agrees that the provisions of 31 U.S.C. § 3801 *et seq.*, apply to this certification and disclosure, if any.

Signature of Contractor's Authorized Official — Date: 5/23/2013

MARK D. ROBERTS, VP SALES
Name and Title of Contractor's Authorized Official

8. ACCESS TO RECORDS AND REPORTS
49 U.S.C. § 5325
18 C.F.R. pt.18.36 (i)
49 C.F.R. pt. 633.15

Access to Records - The following access to records requirements apply to this Contract:

1. Where the Purchaser is not a State but a local government and is the FTA Recipient or a subgrantee of the FTA Recipient in accordance with 49 C.F.R. pt. 18.36(i), the Contractor agrees to provide the Purchaser, the FTA Administrator, the Comptroller General of the United States or any of their authorized representatives access to any books, documents, papers and records of the Contractor which are directly pertinent to this contract for the purposes of making audits,

any of their authorized representatives access to any books, documents, papers and records of the Contractor which are directly pertinent to this contract for the purposes of making audits, examinations, excerpts and transcriptions. Contractor also agrees, pursuant to 49 C.F.R. pt. 633.15 to provide the FTA Administrator or his authorized representatives including any PMO Contractor access to Contractor's records and construction sites pertaining to a major capital project, defined at 49 U.S.C. § 5302(a)1, which is receiving federal financial assistance through the programs described at 49 U.S.C. §§ 5307, 5309 or 5311.

2. Where the Purchaser is a State and is the FTA Recipient or a subgrantee of the FTA Recipient in accordance with 49 C.F.R. pt. 633.15, Contractor agrees to provide the Purchaser, the FTA Administrator or his authorized representatives, including any PMO Contractor, access to the Contractor's records and construction sites pertaining to a major capital project, defined at 49 U.S.C.§ 5302(a)1, which is receiving federal financial assistance through the programs described at 49 U.S.C. §§ 5307, 5309 or 5311. By definition, a major capital project excludes contracts of less than the simplified acquisition threshold currently set at $100,000.

3. Where the Purchaser enters into a negotiated contract for other than a small purchase or under the simplified acquisition threshold and is an institution of higher education, a hospital or other non-profit organization and is the FTA Recipient or a subgrantee of the FTA Recipient in accordance with 49 C.F.R. pt. 19.48, Contractor agrees to provide the Purchaser, FTA Administrator, the Comptroller General of the United States or any of their duly authorized representatives with access to any books, documents, papers and record of the Contractor which are directly pertinent to this contract for the purposes of making audits, examinations, excerpts and transcriptions.

4. Where any Purchaser which is the FTA Recipient or a subgrantee of the FTA Recipient in accordance with 49 U.S.C. § 5325(a) enters into a contract for a capital project or improvement (defined at 49 U.S.C. § 5302(a)(1)) through other than competitive bidding, the Contractor shall make available records related to the contract to the Purchaser, the Secretary of Transportation and the Comptroller General or any authorized officer or employee of any of them for the purposes of conducting an audit and inspection.

5. The Contractor agrees to permit any of the foregoing parties to reproduce by any means whatsoever or to copy excerpts and transcriptions as reasonably needed.

6. The Contractor agrees to maintain all books, records, accounts and reports required under this contract for a period of not less than three years after the date of termination or expiration of this contract, except in the event of litigation or settlement of claims arising from the performance of this contract, in which case Contractor agrees to maintain same until the Purchaser, the FTA Administrator, the Comptroller General, or any of their duly authorized representatives, have disposed of all such litigation, appeals, claims or exceptions related thereto. 49 C.F.R. pt. 18.36(i)(11).

7. FTA does not require the inclusion of these requirements in subcontracts.

Requirements for Access to Records and Reports by Types of Contract

Contract Characteristics	Operational Service Contract	Turnkey	Construction	Architectural Engineering	Acquisition of Rolling Stock	Professional Services
I State Grantees						
a. Contracts below SAT ($100,000)	None	Those imposed on state pass thru to Contractor	None	None	None	None
b. Contracts above $100,000/Capital Projects	None unless[1] non-competitive award		Yes, if non-competitive award or if funded thru[2] 5307/5309/5311	None unless non-competitive award	None unless non-competitive award	None unless non-competitive award
II Non State Grantees						
a. Contracts below SAT ($100,000)	Yes[3]	Those imposed on non-state Grantee pass thru to Contractor	Yes	Yes	Yes	Yes
b. Contracts above $100,000/Capital Projects	Yes[3]		Yes	Yes	Yes	Yes

Sources of Authority:
[1] 49 U.S.C. § 5325(a)
[2] 49 C.F.R. pt. 633.17
[3] 18 C.F.R. pt. 18.36(i)

9. FEDERAL CHANGES
49 C.F.R. pt. 18

Federal Changes - Contractor shall at all times comply with all applicable FTA regulations, policies, procedures and directives, including without limitation those listed directly or by reference in the Master Agreement between Purchaser and FTA, as they may be amended or promulgated from time to time during the term of this contract. Contractor's failure to so comply shall constitute a material breach of this contract.

10. CLEAN AIR
42 U.S.C. §§ 7401 *et seq.*
49 C.F.R. pt. 18

Clean Air - (1) The Contractor agrees to comply with all applicable standards, orders or regulations issued pursuant to the Clean Air Act, as amended, 42 U.S.C. §§ 7401 *et seq.* The Contractor agrees to report each violation to the Purchaser and understands and agrees that the Purchaser will, in turn, report each violation as required to assure notification to FTA and the appropriate EPA Regional Office.

(2) The Contractor also agrees to include these requirements in each subcontract exceeding $100,000 financed in whole or in part with Federal assistance provided by FTA.

11. RECYCLED PRODUCTS
42 U.S.C. 6962
40 C.F.R.pt. 247
Executive Order 12873

Recovered Materials - The contractor agrees to comply with all the requirements of Section 6002 of the Resource Conservation and Recovery Act (RCRA), as amended (42 U.S.C. § 6901), including but not limited to the regulatory provisions of 40 C.F.R. pt. 247, and Executive Order 12873, as they apply to the procurement of the items designated in Subpart B of 40 C.F.R. pt. 247.

12. NO GOVERNMENT OBLIGATION TO THIRD PARTIES

(1) The Purchaser and Contractor acknowledge and agree that, notwithstanding any concurrence by the Federal Government in or approval of the solicitation or award of the underlying contract, absent the express written consent by the Federal Government, the Federal Government is not a party to this contract and shall not be subject to any obligations or liabilities to the Purchaser, Contractor, or any other party (whether or not a party to that contract) pertaining to any matter resulting from the underlying contract.

(2) The Contractor agrees to include the above clause in each subcontract financed in whole or in part with Federal assistance provided by FTA. It is further agreed that the clause shall not be modified, except to identify the subcontractor who will be subject to its provisions.

13. PROGRAM FRAUD AND FALSE OR FRAUDULENT STATEMENTS AND RELATED ACTS
31 U.S.C. §§ 3801 *et seq.*
49 C.F.R. pt. 31, 18 U.S.C. § 1001
49 U.S.C. § 5307

Program Fraud and False or Fraudulent Statements or Related Acts.

(1) The Contractor acknowledges that the provisions of the Program Fraud Civil Remedies Act of 1986, as amended, 31 U.S.C. § 3801 *et seq.* and U.S. DOT regulations, "Program Fraud Civil Remedies," 49 C.F.R. pt. 31, apply to its actions pertaining to this Project. Upon execution of the underlying contract, the Contractor certifies or affirms the truthfulness and accuracy of any statement it has made, it makes, it may make, or causes to be made, pertaining to the underlying contract or the FTA assisted project for which this contract work is being performed. In addition to other penalties that may be applicable, the Contractor further acknowledges that if it makes, or causes to be made, a false, fictitious, or fraudulent claim, statement, submission, or certification, the Federal Government reserves the right to impose the penalties of the Program Fraud Civil Remedies Act of 1986 on the Contractor to the extent the Federal Government deems appropriate.

(2) The Contractor also acknowledges that if it makes, or causes to be made, a false, fictitious, or fraudulent claim, statement, submission, or certification to the Federal Government under a contract connected with a project that is financed in whole or in part with Federal assistance originally awarded by FTA under the authority of 49 U.S.C. § 5307, the Government reserves the right to impose the penalties of 18 U.S.C. § 1001 and 49 U.S.C. § 5307(n)(1) on the Contractor, to the extent the Federal Government deems appropriate.

(3) The Contractor agrees to include the above two clauses in each subcontract financed in whole or in part with Federal assistance provided by FTA. It is further agreed that the clauses shall not be modified, except to identify the subcontractor who will be subject to the provisions.

14. TERMINATION
49 U.S.C. § 10301 *et seq.*
FTA Circular 4220.1F

a. Termination for Convenience (General Provision) The (Recipient) may terminate this contract, in whole or in part, at any time by written notice to the Contractor when it is in the Government's best interest. The Contractor shall be paid its costs, including contract close-out costs, and profit on work performed up to the time of termination. The Contractor shall promptly submit its termination claim to (Recipient) to be paid the Contractor. If the Contractor has any property in its possession belonging to the (Recipient), the Contractor will account for the same, and dispose of it in the manner the (Recipient) directs.

b. Termination for Default [Breach or Cause] (General Provision) If the Contractor does not deliver supplies in accordance with the contract delivery schedule, or, if the contract is for services, the Contractor fails to perform in the manner called for in the contract, or if the Contractor fails to comply with any other provisions of the contract, the (Recipient) may terminate this contract for default. Termination shall be effected by serving a notice of termination on the contractor setting forth the manner in which the Contractor is in default. The contractor will only be paid the contract price for supplies delivered and accepted, or services performed in accordance with the manner of performance set forth in the contract. If it is later determined by the (Recipient) that the Contractor had an excusable reason for not performing, such as a strike, fire, or flood, events which are not the fault of or are beyond the control of the Contractor, the (Recipient), after setting up a new delivery of performance schedule, may allow the Contractor to continue work, or treat the termination as a termination for convenience.

c. Opportunity to Cure (General Provision) The (Recipient) in its sole discretion may, in the case of a termination for breach or default, allow the Contractor [an appropriately short period of time] in which to cure the defect. In such case, the notice of termination will state the time period in which cure is permitted and other appropriate conditions

If Contractor fails to remedy to (Recipient)'s satisfaction the breach or default of any of the terms, covenants, or conditions of this Contract within 10 days after receipt by Contractor of written notice from (Recipient) setting forth the nature of said breach or default, (Recipient) shall have the right to terminate the Contract without any further obligation to Contractor. Any such

termination for default shall not in any way operate to preclude (Recipient) from also pursuing all available remedies against Contractor and its sureties for said breach or default.

d. Waiver of Remedies for any Breach In the event that (Recipient) elects to waive its remedies for any breach by Contractor of any covenant, term or condition of this Contract, such waiver by (Recipient) shall not limit (Recipient)'s remedies for any succeeding breach of that or of any other term, covenant, or condition of this Contract.

e. Termination for Convenience (Professional or Transit Service Contracts) The (Recipient), by written notice, may terminate this contract, in whole or in part, when it is in the Government's interest. If this contract is terminated, the Recipient shall be liable only for payment under the payment provisions of this contract for services rendered before the effective date of termination.

f. Termination for Default (Supplies and Service) If the Contractor fails to deliver supplies or to perform the services within the time specified in this contract or any extension or if the Contractor fails to comply with any other provisions of this contract, the (Recipient) may terminate this contract for default. The (Recipient) shall terminate by delivering to the Contractor a Notice of Termination specifying the nature of the default. The Contractor will only be paid the contract price for supplies delivered and accepted, or services performed in accordance with the manner or performance set forth in this contract.

If, after termination for failure to fulfill contract obligations, it is determined that the Contractor was not in default, the rights and obligations of the parties shall be the same as if the termination had been issued for the convenience of the Recipient.

g. Termination for Default (Transportation Services) If the Contractor fails to pick up the commodities or to perform the services, including delivery services, within the time specified in this contract or any extension or if the Contractor fails to comply with any other provisions of this contract, the (Recipient) may terminate this contract for default. The (Recipient) shall terminate by delivering to the Contractor a Notice of Termination specifying the nature of default. The Contractor will only be paid the contract price for services performed in accordance with the manner of performance set forth in this contract.

If this contract is terminated while the Contractor has possession of Recipient goods, the Contractor shall, upon direction of the (Recipient), protect and preserve the goods until surrendered to the Recipient or its agent. The Contractor and (Recipient) shall agree on payment for the preservation and protection of goods. Failure to agree on an amount will be resolved under the Dispute clause.

If, after termination for failure to fulfill contract obligations, it is determined that the Contractor was not in default, the rights and obligations of the parties shall be the same as if the termination had been issued for the convenience of the (Recipient).

h. Termination for Default (Construction) If the Contractor refuses or fails to prosecute the work or any separable part, with the diligence that will ensure its completion within the time specified in this contract or any extension or fails to complete the work within this time, or if the

Contractor fails to comply with any other provisions of this contract, the (Recipient) may terminate this contract for default. The (Recipient) shall terminate by delivering to the Contractor a Notice of Termination specifying the nature of the default. In this event, the Recipient may take over the work and compete it by contract or otherwise, and may take possession of and use any materials, appliances, and plant on the work site necessary for completing the work. The Contractor and its sureties shall be liable for any damage to the Recipient resulting from the Contractor's refusal or failure to complete the work within specified time, whether or not the Contractor's right to proceed with the work is terminated. This liability includes any increased costs incurred by the Recipient in completing the work.

The Contractor's right to proceed shall not be terminated nor shall the Contractor be charged with damages under this clause if

1. the delay in completing the work arises from unforeseeable causes beyond the control and without the fault or negligence of the Contractor. Examples of such causes include: acts of God, acts of the Recipient, acts of another Contractor in the performance of a contract with the Recipient, epidemics, quarantine restrictions, strikes, freight embargoes; and
2. the contractor, within 10 days from the beginning of any delay, notifies the (Recipient) in writing of the causes of delay. If in the judgment of the (Recipient), the delay is excusable, the time for completing the work shall be extended. The judgment of the (Recipient) shall be final and conclusive on the parties, but subject to appeal under the Disputes clauses.

If, after termination of the Contractor's right to proceed, it is determined that the Contractor was not in default, or that the delay was excusable, the rights and obligations of the parties will be the same as if the termination had been issued for the convenience of the Recipient.

i. Termination for Convenience or Default (Architect and Engineering) The (Recipient) may terminate this contract in whole or in part, for the Recipient's convenience or because of the failure of the Contractor to fulfill the contract obligations. The (Recipient) shall terminate by delivering to the Contractor a Notice of Termination specifying the nature, extent, and effective date of the termination. Upon receipt of the notice, the Contractor shall (1) immediately discontinue all services affected (unless the notice directs otherwise), and (2) deliver to the Contracting Officer all data, drawings, specifications, reports, estimates, summaries, and other information and materials accumulated in performing this contract, whether completed or in process.

If the termination is for the convenience of the Recipient, the Contracting Officer shall make an equitable adjustment in the contract price but shall allow no anticipated profit on unperformed services.

If the termination is for failure of the Contractor to fulfill the contract obligations, the Recipient may complete the work by contact or otherwise and the Contractor shall be liable for any additional cost incurred by the Recipient.

If, after termination for failure to fulfill contract obligations, it is determined that the Contractor was not in default, the rights and obligations of the parties shall be the same as if the termination had been issued for the convenience of the Recipient.

j. Termination for Convenience of Default (Cost-Type Contracts) The (Recipient) may terminate this contract, or any portion of it, by serving a notice or termination on the Contractor. The notice shall state whether the termination is for convenience of the (Recipient) or for the default of the Contractor. If the termination is for default, the notice shall state the manner in which the contractor has failed to perform the requirements of the contract. The Contractor shall account for any property in its possession paid for from funds received from the (Recipient), or property supplied to the Contractor by the (Recipient). If the termination is for default, the (Recipient) may fix the fee, if the contract provides for a fee, to be paid the contractor in proportion to the value, if any, of work performed up to the time of termination. The Contractor shall promptly submit its termination claim to the (Recipient) and the parties shall negotiate the termination settlement to be paid the Contractor.

If the termination is for the convenience of the (Recipient), the Contractor shall be paid its contract close-out costs, and a fee, if the contract provided for payment of a fee, in proportion to the work performed up to the time of termination.

If, after serving a notice of termination for default, the (Recipient) determines that the Contractor has an excusable reason for not performing, such as strike, fire, flood, events which are not the fault of and are beyond the control of the contractor, the (Recipient), after setting up a new work schedule, may allow the Contractor to continue work, or treat the termination as a termination for convenience.

15. GOVERNMENT WIDE DEBARMENT AND SUSPENSION (NONPROCUREMENT)

This contract is a covered transaction for purposes of U.S.DOT regulations, "Nonprocurement Suspension and Debarment," 2 C.F.R. pt. 1200, which adopts and supplements U.S. Office of Management and Budget (U.S. OMB) "Guidelines to Agencies on Government Wide Debarment and Suspension (Nonprocurement)," 2 C.F.R. pt. 180.

Accordingly:

(1) The Contractor agrees to comply with the requirements of 2 C.F.R. pt. 1200, which adopts and supplements 2 C.F.R. pt. 180, throughout the period of this contract.

(2) The Contractor verifies that neither it, including its principals and affiliates, nor any of its principals in this contract, including subcontractors at any tier with contracts of $25,000 or more, or requires the consent of a Federal official, or is for federally required audit services are presently excluded or disqualified, under the standards of those U.S. DOT regulations and U.S. OMB guidelines; or have been provided an exception in accordance with those U.S. DOT regulations and U.S. OMB guidelines. Among other things, the Contractor before entering into a covered subcontract, the Contractor agrees to:

(a) Check the U.S. General Services Administration Excluded Parties List System (EPLS); or

(b) Collect a certification from that person; or

(c) Add a clause or condition the invitation for bids or request for proposals pertaining to a covered third party contract or transaction.

(3) The Contractor agrees that it must inform the **buyer/owner** of any different information that may later come to its attention for the duration of this contract.

(4) The Contractor agrees to include a similar clause in any subcontract at any tier expected to be priced at $25,000 or more **(or if applicable, contract at any tier that requires the consent of a Federal official, or contract at any tier for federally required audit services of any value).**

16. PRIVACY ACT
5 U.S.C. § 552

Contracts Involving Federal Privacy Act Requirements - The following requirements apply to the Contractor and its employees that administer any system of records on behalf of the Federal Government under any contract:

(1) The Contractor agrees to comply with, and assures the compliance of its employees with, the information restrictions and other applicable requirements of the Privacy Act of 1974, 5 U.S.C. § 552a. Among other things, the Contractor agrees to obtain the express consent of the Federal Government before the Contractor or its employees operate a system of records on behalf of the Federal Government. The Contractor understands that the requirements of the Privacy Act, including the civil and criminal penalties for violation of that Act, apply to those individuals involved, and that failure to comply with the terms of the Privacy Act may result in termination of the underlying contract.

(2) The Contractor also agrees to include these requirements in each subcontract to administer any system of records on behalf of the Federal Government financed in whole or in part with Federal assistance provided by FTA.

17. CIVIL RIGHTS REQUIREMENTS
42 U.S.C. § 6102, 42 U.S.C. § 12112
42 U.S.C. § 12132, 49 U.S.C. § 5332
29 C.F.R. pt. 1630, 41 C.F.R. pts. 60 *et seq.*

Civil Rights - The following requirements apply to the underlying contract:

(1) **Nondiscrimination** - In accordance with Title VI of the Civil Rights Act, as amended, 42 U.S.C. § 2000d, section 303 of the Age Discrimination Act of 1975, as amended, 42 U.S.C. § 6102, section 202 of the Americans with Disabilities Act of 1990, 42 U.S.C. § 12132, and Federal transit law at 49 U.S.C. § 5332, the Contractor agrees that it will not discriminate against any employee or applicant for employment because of race, color, creed, national origin, sex, age, or disability. In addition, the Contractor agrees to comply with applicable Federal implementing regulations and other implementing requirements FTA may issue.

(2) **Equal Employment Opportunity** - The following equal employment opportunity requirements apply to the underlying contract:
(a) **Race, Color, Creed, National Origin, Sex** - In accordance with Title VII of the Civil Rights Act, as amended, 42 U.S.C. § 2000e, and Federal transit laws at 49 U.S.C. § 5332, the Contractor

agrees to comply with all applicable equal employment opportunity requirements of U.S. Department of Labor (U.S. DOL) regulations, "Office of Federal Contract Compliance Programs, Equal Employment Opportunity, Department of Labor," 41 C.F.R. pts. 60 *et seq.*, (which implement Executive Order No. 11246, "Equal Employment Opportunity," as amended by Executive Order No. 11375, "Amending Executive Order 11246 Relating to Equal Employment Opportunity," 42 U.S.C. § 2000e note), and with any applicable Federal statutes, executive orders, regulations, and Federal policies that may in the future affect construction activities undertaken in the course of the Project. The Contractor agrees to take affirmative action to ensure that applicants are employed, and that employees are treated during employment, without regard to their race, color, creed, national origin, sex, or age. Such action shall include, but not be limited to, the following: employment, upgrading, demotion or transfer, recruitment or recruitment advertising, layoff or termination; rates of pay or other forms of compensation; and selection for training, including apprenticeship. In addition, the Contractor agrees to comply with any implementing requirements FTA may issue.
(b) **Age** - In accordance with section 4 of the Age Discrimination in Employment Act of 1967, as amended, 29 U.S.C. §§ 623 and Federal transit law at 49 U.S.C. § 5332, the Contractor agrees to refrain from discrimination against present and prospective employees for reason of age. In addition, the Contractor agrees to comply with any implementing requirements FTA may issue.
(c) **Disabilities** - In accordance with section 102 of the Americans with Disabilities Act, as amended, 42 U.S.C. § 12112, the Contractor agrees that it will comply with the requirements of U.S. Equal Employment Opportunity Commission, "Regulations to Implement the Equal Employment Provisions of the Americans with Disabilities Act," 29 C.F.R. pt. 1630, pertaining to employment of persons with disabilities. In addition, the Contractor agrees to comply with any implementing requirements FTA may issue.

(3) The Contractor also agrees to include these requirements in each subcontract financed in whole or in part with Federal assistance provided by FTA, modified only if necessary to identify the affected parties.

18. BREACHES AND DISPUTE RESOLUTION
49 C.F.R. pt. 18
FTA Circular 4220.1F

Applicability to Contracts
All contracts in excess of $100,000 shall contain provisions or conditions which will allow for administrative, contractual, or legal remedies in instances where contractors violate or breach contract terms, and provide for such sanctions and penalties as may be appropriate. This may include provisions for bonding, penalties for late or inadequate performance, retained earnings, liquidated damages or other appropriate measures.

Flow Down
The Breaches and Dispute Resolutions requirements flow down to all tiers.

Model Clauses/Language
FTA does not prescribe the form or content of such provisions. What provisions are developed will depend on the circumstances and the type of contract. Recipients should consult legal

counsel in developing appropriate clauses. The following clauses are examples of provisions from various FTA third party contracts.

Disputes - Disputes arising in the performance of this Contract which are not resolved by agreement of the parties shall be decided in writing by the authorized representative of (Recipient)'s [title of employee]. This decision shall be final and conclusive unless within 10 days from the date of receipt of its copy, the Contractor mails or otherwise furnishes a written appeal to the [title of employee]. In connection with any such appeal, the Contractor shall be afforded an opportunity to be heard and to offer evidence in support of its position. The decision of the [title of employee] shall be binding upon the Contractor and the Contractor shall abide be the decision.

Performance During Dispute - Unless otherwise directed by (Recipient), Contractor shall continue performance under this Contract while matters in dispute are being resolved.

Claims for Damages - Should either party to the Contract suffer injury or damage to person or property because of any act or omission of the party or of any of his employees, agents or others for whose acts he is legally liable, a claim for damages therefore shall be made in writing to such other party within a reasonable time after the first observance of such injury of damage.

Remedies - Unless this contract provides otherwise, all claims, counterclaims, disputes and other matters in question between the (Recipient) and the Contractor arising out of or relating to this agreement or its breach will be decided by arbitration if the parties mutually agree, or in a court of competent jurisdiction within the State in which the (Recipient) is located.

Rights and Remedies - The duties and obligations imposed by the Contract Documents and the rights and remedies available thereunder shall be in addition to and not a limitation of any duties, obligations, rights and remedies otherwise imposed or available by law. No action or failure to act by the (Recipient), (Architect) or Contractor shall constitute a waiver of any right or duty afforded any of them under the Contract, nor shall any such action or failure to act constitute an approval of or acquiescence in any breach thereunder, except as may be specifically agreed in writing.

19. DISADVANTAGED BUSINESS ENTERPRISE (DBE)
49 C.F.R. pt. 26

Background and Applicability

The newest version on the Department of Transportation's Disadvantaged Business Enterprise (DBE) program became effective July 16, 2003. The rule provides guidance to grantees on the use of overall and contract goals, requirement to include DBE provisions in subcontracts, evaluating DBE participation where specific contract goals have been set, reporting requirements, and replacement of DBE subcontractors. Additionally, the DBE program dictates payment terms and conditions (including limitations on retainage) applicable to all subcontractors regardless of whether they are DBE firms or not.

The DBE program applies to all DOT-assisted contracting activities. A formal clause such as that below must be included in all contracts above the micro-purchase level. The requirements of subsection b flow down to subcontracts. A substantial change to the payment provisions in this newest version of Part 26 concerns retainage (*see* section 26.29). Grantee choices concerning retainage should be reflected in the language choices in subsection d.

Disadvantaged Business Enterprises

a. This contract is subject to the requirements of 49 C.F.R. pt. 26, and Participation by Disadvantaged Business Enterprises in Department of Transportation Financial Assistance Programs. The national goal for participation of Disadvantaged Business Enterprises (DBE) is 10 percent. A separate contract goal **has not** been established for this procurement.

b. The contractor shall not discriminate on the basis of race, color, national origin, or sex in the performance of this contract. The contractor shall carry out applicable requirements of 49 C.F.R. pt. 26 in the award and administration of this DOT-assisted contract. Failure by the contractor to carry out these requirements is a material breach of this contract, which may result in the termination of this contract or such other remedy as **DRPT** deems appropriate. Each subcontract the contractor signs with a subcontractor must include the assurance in this paragraph (*see* 49 C.F.R. pt. 26.13(b)).
1. The names and addresses of DBE firms that will participate in this contract;
2. A description of the work each DBE will perform;
3. The dollar amount of the participation of each DBE firm participating;
4. Written documentation of the Bidder's commitment to use a DBE subcontractor whose participation it submits to meet the contract goal;
5. Written confirmation from the DBE that it is participating in the contract as provided in the prime contractor's commitment; and
6. If the contract goal is not met, evidence of good faith efforts to do so.
The successful Bidder will be required to report its DBE participation obtained through race-neutral means throughout the period of performance.

c. The successful contractor will be required to report its DBE obtained through race-neutral means throughout the period of performance.

d. The contractor is required to pay its subcontractors performing work related to this contract for satisfactory performance of that work no later than 30 days after the contractor's receipt of payment for that work from DRPT. In addition, the contractor is required to return any retainage payments to those subcontractors within 30 days after incremental acceptance of the subcontractor's work by the DRPT and contractor's receipt of the partial retainage payment related to the subcontractor's work.

e. The contractor must promptly notify DRPT, whenever a DBE subcontractor performing work related to this contract is terminated or fails to complete its work, and must make good faith efforts to engage another DBE subcontractor to perform at least the same amount of work. The contractor may not terminate any DBE subcontractor and perform that work through its own

forces or those of an affiliate without prior written consent of DRPT or authorized user of the contract.

20. INCORPORATION OF FEDERAL TRANSIT ADMINISTRATION (FTA) TERMS FTA Circular 4220.1F

Incorporation of Federal Transit Administration (FTA) Terms - The preceding provisions include, in part, certain Standard Terms and Conditions required by DOT, whether or not expressly set forth in the preceding contract provisions. All contractual provisions required by DOT, as set forth in FTA Circular 4220.1F, are hereby incorporated by reference. Anything to the contrary herein notwithstanding, all FTA mandated terms shall be deemed to control in the event of a conflict with other provisions contained in this Agreement. The Contractor shall not perform any act, fail to perform any act, or refuse to comply with any DRPT or authorized users requests which would cause DRPT or authorized users to be in violation of the FTA terms and conditions.

21. FTA CERTIFICATIONS

ATTACHMENT J-1

CONTRACTOR: NUMBER:

EQUIPMENT:

1.2.21 TRANSIT VEHICLE MANUFACTURE'S CERTIFICATION HAS COMPLIANCE WITH SUBPART D, 49 C.F.R. pt. 23.

This procurement is subject to the provisions of § 23.67 of 49 C.F.R. pt. 23. Accordingly, as a condition of permission to bid, the following certification must be completed and submitted with the bid. A bid, which does not include the certification, will not be considered.

TRANSIT VEHICLE MANUFACTURER CERTIFICATION

SUE FOR OEM MANUFACTURER, a TVM, hereby certifies that it has complied with the requirements of Section 23.67 of 49 C.F.R. pt. 23 by submitting a current annual DBE goal to FTA. The goals apply to Federal Fiscal Year 2013 (October 1, 2012 to September 30, 2013) and have been approved or not disapproved by FTA.

MARK D. ROBERTS, hereby certifies that the manufacturer of the transit vehicle supplied SUE FOR OEM has complied with the above-reference requirement of § 23.67 of 49 C.F.R. pt. 23.

Date: 5/23/2013

Signature: Mark D. Roberts

Title: VP SALES

Firm: SONNY MERRYMAN, INC.

ATTACHMENT J-2

BIDDER'S CERTIFICATION OF DISADVANTAGED BUSINESS ENTERPRISE (DBE) SUBMISSION TO FTA

The SONNY MERRYMAN, INC. /
(name of Bidder) hereby certifies that it has submitted plans for the participation of Disadvantaged Business Enterprise (DBE) in conformation to the U. S. Department of Transportation's Minority business Enterprise Regulations (49 C.F.R. pt. 26) and is eligible to bid on vehicle contracts awarded under assistance from the Federal Transit Administration (FTA).

Bidder's Name SONNY MERRYMAN, INC.

Signature: _____ Date: 5/23/2013
Authorized Agent

MARK D. ROBERTS, VP SALES
Printed Name & Title

State of Virginia
County of Campbell

Subscribed and sworn to before me this 23rd day of May, 20 13.

Vicky M Overstreet
Notary Public Reg. # 110524

VICKY M. OVERSTREET
COMMONWEALTH OF VIRGINIA
NOTARY PUBLIC

My Commission expires 04-30, 20 16.

ATTACHEMENT J-3

Affidavit of Non-Collusion

I hereby swear (or affirm) under the penalty for perjury:

1. That I am the Bidder (If the Bidder is an individual, a partner in the bid (if the Bidder is a partnership), or an officer or employee of the bidding corporation having authority to sign on its behalf (if the Bidder is a corporation);

2. That the attached bid or bids has been arrived at by the Bidder independently and have been submitted without collusion and without any agreement, understanding, or planned common course of action with any other vendor of materials, supplies, equipment, or service described in the invitation for bid, designed to limit independent bids or competition;

3. That the contents of the bid or bids has not been communicated by the Bidder or its employees or agents to any person not an employee or agent of the Bidder or its surety on any bond furnished with the bid or bids, and will not be communicated to any such person prior to the official opening of the bid or bids.

4. That I have fully informed myself regarding the accuracy of the statements made in the affidavit.

Bidder's Name: MARK D. ROBERTS FOR SONNY MERRYMAN, INC.

Signature: _____ Date: 5/23/2013

Authorized Signature

MARK D. ROBERTS, VP SALES

Print Name and Title

State of Virginia
County of Campbell

Subscribed and sworn to before me this 23rd day of May, 20 13.

Vicky M Overstreet

Notary public Reg. # 110524

VICKY M. OVERSTREET
COMMONWEALTH OF VIRGINIA
NOTARY PUBLIC

My Commission expires April 30 20 16.

Bidder's E.I. Number 54-0806176

(Number used on employer's Quarterly Federal Tax Return)

STURAA TEST

7 YEAR

200,000 MILE BUS

from

ELDORADO NATIONAL-KANSAS

MODEL E-450-ATF240 CNG POWERED

AUGUST 2012

PTI-BT-R1204

PENNSTATE

The Thomas D. Larson
Pennsylvania Transportation Institute
Vehicle Systems and Safety Program

201 Transportation Research Building (814) 865-1891
The Pennsylvania State University
University Park, PA 16802

Bus Testing and Research Center

2237 Old Route 220 N. (814) 695-3404
Duncansville, PA 16635

ACCREDITED
MECHANICAL TESTING
CERTIFICATE 3172.01

EXECUTIVE SUMMARY

Eldorado National-Kansas submitted a model E-450-ATF240 CNG, CNG-powered 19 seat/25-foot bus, for a 7 yr/200,000 mile STURAA test. The odometer reading at the time of delivery was 928 miles. Testing started on March 29, 2012 and was completed on August 3, 2012. The Check-In section of the report provides a description of the bus and specifies its major components.

The primary part of the test program is the Structural Durability Test, which also provides the information for the Maintainability and Reliability results. The Structural Durability Test was started on April 9, 2012 and was completed on June 13, 2012.

The interior of the bus is configured with seating for 19 passengers including the driver. Note; as per manufacturer this test bus is not designed to permit standing passengers. At 150 lbs per person, this load results in a measured gross vehicle weight of 14,110 lbs. **Note: as per manufacturer this test bus is not designed to permit standing passengers, therefore GVW and SLW are the same 14,110 lbs. At gross vehicle load (GVL) and seated load weight (SLW), the load is 470 lbs over the rear gross axle weight (GAWR).** The first segment of the Structural Durability Test was performed with the bus loaded to a GVW of 14,110 lbs. The middle segment was performed at a seated load weight of 14,110 lbs and the final segment was performed at a curb weight of 10,410 lbs. Durability driving resulted in unscheduled maintenance and failures that involved a variety of subsystems. A description of failures, and a complete and detailed listing of scheduled and unscheduled maintenance is provided in the Maintainability section of this report.

Effective January 1, 2010 the Federal Transit Administration determined that the total number of simulated passengers used for loading all test vehicles will be based on the full complement of seats and free-floor space available for standing passengers (150 lbs per passenger). The passenger loading used for dynamic testing will not be reduced in order to comply with Gross Axle Weight Ratings (GAWR's) or the Gross Vehicle Weight Ratings (GVWR's) declared by the manufacturer. Cases where the loading exceeds the GAWR and/or the GVWR will be noted accordingly. During the testing program, all test vehicles transported or operated over public roadways will be loaded to comply with the GAWR and GVWR specified by the manufacturer.

Accessibility, in general, was adequate, components covered in Section 1.3 (Repair and/or Replacement of Selected Subsystems) along with all other components encountered during testing, were found to be readily accessible and no restrictions were noted.

The Reliability section compiles failures that occurred during Structural Durability Testing. Breakdowns are classified according to subsystems. The data in this section are arranged so that those subsystems with more frequent problems are apparent. The problems are also listed by class as defined in Section 2. The test bus encountered no Class 1 or Class 2 failures. Of the two reported failures, one was a Class 3 and one was a Class 4.

The Safety Test, (a double-lane change, obstacle avoidance test) was safely performed in both right-hand and left-hand directions up to a maximum test speed of 45 mph. The performance of the bus is illustrated by a speed vs. time plot. Acceleration and gradeability test data are provided in Section 4, Performance. The average time to obtain 50 mph was 16.47 seconds. The Stopping Distance phase of the Brake Test was completed with the following results; for the Uniform High Friction Test average stopping distances were 27.7' at 20 mph, 57.0' at 30 mph, 97.7' at 40 mph and 120.3' at 45 mph. The average stopping distance for the Uniform Low Friction Test was 28.5'. There was no deviation from the test lane during the performance of the Stopping Distance phase. During the Stability phase of Brake Testing the test bus experienced no deviation from the test lane but did experience pull to the left during both approaches to the Split Friction Road surface. The Parking Brake phase was completed with the test bus maintaining the parked position for the full five minute period with no slip or roll observed in both the uphill and downhill positions.

The Shakedown Test produced a maximum final loaded deflection of 0.121 inches with a permanent set ranging between 0.000 to 0.002 inches under a distributed static load of 7,575 lbs. The Distortion Test was completed with all subsystems, doors and escape mechanisms operating properly. No water leakage was observed throughout the test. All subsystems operated properly.

The test bus submitted for testing was not equipped with any type of tow eyes or tow hooks, therefore the Static Towing Test was not performed. The Dynamic Towing Test was performed by means of a front-lift tow. The towing interface was accomplished using a hydraulic under-lift wrecker. The bus was towed without incident and no damage resulted from the test. The manufacturer does not recommend towing the bus from the rear; therefore, a rear test was not performed. The Jacking and Hoisting Tests were also performed without incident. The bus was found to be stable on the jack stands, and the minimum jacking clearance observed with a tire deflated was 9.2 inches.

A Fuel Economy Test was run on simulated central business district, arterial, and commuter courses. The results were 1.18 M/lb, 1.24 M/lb, and 1.86 M/lb respectively; with an overall average of 1.34 M/lb.

A series of Interior and Exterior Noise Tests was performed. These data are listed in Section 7.1 and 7.2 respectively.

The Emissions Test was performed. These results are available in Section 8 of this report.

PARTIAL

STURAA TEST

7 YEAR

200,000 MILE BUS

from

ROUSH CLEANTECH, LLC.,
A MICHIGAN LIMITED LIABILITY COMPANY

MODEL 2011 ELDORADO

JUNE 2012

PTI-BT-R1207

PENNSTATE

The Thomas D. Larson
Pennsylvania Transportation Institute

201 Transportation Research Building (814) 865-1891
The Pennsylvania State University
University Park, PA 16802

Bus Testing and Research Center

2237 Old Route 220 N. (814) 695-3404
Duncansville, PA 16635

ACCREDITED
MECHANICAL TESTING
CERTIFICATE 3172.01

EXECUTIVE SUMMARY

Roush CleanTech, LLC., a Michigan Limited Liability Company submitted a model 2011, propane-powered 15 seat/25-foot bus, for a partial STURAA test in the 7 yr/200,000 mile category. The Federal Transit Administration determined that the following tests would be performed: 4. Performance/Performance and Brake Testing, 5.1 Structural Shakedown, 5.2 Structural Distortion Test, 6. Fuel economy, 7. Noise Tests and 8. Emissions Testing. Testing started on April 20, 2012 and was completed on June 8, 2012. The Check-In section of the report provides a description of the bus and specifies its major components.

The interior of the bus is configured with seating for 15 passengers including the driver. Free floor space will accommodate 11 standing passengers resulting in a potential load of 26 persons. At 150 lbs per person, this load results in a measured gross vehicle weight of 14,290 lbs.

Effective January 1, 2010 the Federal Transit Administration determined that the total number of simulated passengers used for loading all test vehicles will be based on the full complement of seats and free-floor space available for standing passengers (150 lbs per passenger). The passenger loading used for dynamic testing will not be reduced in order to comply with Gross Axle Weight Ratings (GAWR's) or the Gross Vehicle Weight Ratings (GVWR's) declared by the manufacturer. Cases where the loading exceeds the GAWR and/or the GVWR will be noted accordingly. During the testing program, all test vehicles transported or operated over public roadways will be loaded to comply with the GAWR and GVWR specified by the manufacturer.

The performance of the bus is illustrated by a speed vs. time plot. Acceleration and gradeability test data are provided in Section 4, Performance. The average time to obtain 50 mph was 15.28 seconds. The Stopping Distance phase of the Brake Test was completed with the following results; for the Uniform High Friction Test average stopping distances were 27.15' at 20 mph, 58.13' at 30 mph, 96.52' at 40 mph and 120.87' at 45 mph. The average stopping distance for the Uniform Low Friction Test was 28.85'. There was no deviation from the test lane during the performance of the Stopping Distance phase. During the Stability phase of Brake Testing the test bus experienced no deviation from the test lane but did experience pull to the left during both approaches to the Split Friction Road surface. The Parking Brake phase was completed with the test bus maintaining the parked position for the full five minute period with no slip or roll observed in both the uphill and downhill positions.

The Shakedown Test produced a maximum final loaded deflection of 0.213 inches with a permanent set ranging between -0.004 to 0.003 inches under a distributed static load of 8,250 lbs. The Distortion Test was completed with all subsystems, doors and escape mechanisms operating properly. Water leakage was observed during the propane fill nozzle and at the bottom of the 3rd window, left side.

A Fuel Economy Test was run on simulated central business district, arterial, and commuter courses. The results were 4.45 mpg, 3.79 mpg, and 5.93 mpg respectively; with an overall average of 4.47 mpg.

A series of Interior and Exterior Noise Tests was performed. These data are listed in Section 7.1 and 7.2 respectively.

The Emissions Test was performed. These results are available in Section 8 of this report.

GREEN ALTERNATIVE SYSTEMS

PROPANE SYSTEM OVERVIEW (E450 6.8L DRW CHASSIS)

The components of the 41-gallon propane tank are all designed to fit within the same mounting points of the existing aft-of-rear axle gasoline tank. The system can be broken down into a few primary assemblies:

Fuel Rail Assembly

- Fuel Rail
- Fuel Injectors
- Injection Pressure / Temperature Sensor

Fuel Line Assembly

- Fuel Lines
- Flow Control Solenoid

Fuel Tank Assembly

- Fuel Tank
- Fuel Pump
- Fuel Level Sensor

Recalibration of Ford Powertrain Control System

- Calibration
- Wiring Harness

- **Aft Rear-Axle Tank**

Gallon Capacity (80%):	41
Dimensions:	38" (length) 42" (width) 16" (height)

<u>CERTIFICATION</u>: Certified to current Federal EPA & 2012 CARB emissions requirements, FMVSS, and NHTSA
<u>REQUIRED FORD OPTION</u>: 91G – CNG/LPI Hardened Valve Prep Package

Green Alternative Systems

28293 Clay Street Elkhart, Indiana 46517

(T) 574-343-1050 (F) 574-584-7829

Green Alternative Systems

GASN-E450-EFS4-13-A

Ford E-450 Cutaway Extended Range Transit CNG Specification

COMPRESSED NATURAL GAS FUEL SYSTEM

- Ford E-450 Cutaway Chassis
    - 2013 Model Year
    - 6.8L V-10 Gasoline Engine
    - Gaseous Fuel Prep Package Required
    - 40 Gasoline Gallon Equivalents
    - EPA & CARB Certified
    - FTA Compliant
        - 7 Year/200,000 Mile Test Complete per this specification, as installed by the upfitter of record (Green Alternative Systems) per the FTA (Federal Transit Administration) bus testing site in Altoona, PA.

GREEN ALTERNATIVE SYSTEMS STANDARD FEATURES

- Engine System
    - BAF Technologies Cal-Comp Engine System
    - Ford Qualified Vehicle Modifier Engine System Developer
    - Ford Qualified Calibration Modifier Engine System Developer
    - Ford Quality Fleet Care Engine System Developer
    - ISO Certified Engine System Developer
    - CARB & EPA Certified

- Fuel Delivery System
    - Ford Qualified Vehicle Modifier Alternative Fuel System Installer
    - Altoona Tested 7 year/200,000 Mile Test

- Compressed Natural Gas Fuel Cylinders

  - All CNG vehicle fuel cylinders shall meet the federal government's FMVSS 304 (49 CFR 571.304), Compressed Natural Gas Fuel Container Integrity. All CNG vehicle fuel cylinders shall meet ANSI/CSA NGV2, Basic Requirements for Compressed Natural Gas Vehicle Fuel Containers.
  - Cylinders shall be fabricated of aluminum liner fully wrapped with epoxy-impregnated aerospace-grade carbon fiber (Type 3).
  - All cylinders shall be designed for CNG service and shall be permanently marked "CNG Only" by the manufacturer.
  - Marked service life of CNG cylinder shall be 20 years from manufacture date. * Cylinders shall be manufactured, inspected, marked, tested, retested, equipped, and used in accordance with the following: (1) U.S. Department of Transportation (DOT) or Transport Canada (TC) regulations, exemptions, or special permits (2) ANSI/IAS NGV2, Basic Requirements for Compressed Natural Gas Vehicle (NGV) Fuel Containers, specifically for CNG service (3) CSA B51, Boiler, Pressure Vessel and Pressure Piping Code
  - All cylinders valves shall be equipped with a solenoid electric shut-off valve allowing full integration with the ignition switch.
  - All cylinders shall be equipped with a pressure relief device (PRD) to automatically relieve pressure from cylinders to prevent damage once excessive temperature has been realized (NFPA 52).
  - All cylinder valves have a manual shut off valves which requires no tools to operate.
  - All cylinder valves have an excess flow device to reduce/stop the flow of high pressure fuel leaks.
  - All cylinder valves shall be accessible through the gravel shields for easy quick access.

- High Pressure Fuel Lines and Emergency Vent Line

  - All 3/8" tubing shall be minimum specification .049 wall thicknesses rated for working pressure of 4800 psi, free of scratches, suitable for bending and flaring.
  - All 1/2" tubing shall be minimum specification .049" wall thicknesses rated for working pressure of 3700 psi, free of scratches, suitable for bending and flaring.
  - All 3/8" stainless steel tubing shall be installed per NFPA 52 guidelines with proper clearances from obstructions and secured every 24".
  - All 1/2" stainless steel tubing shall be installed per NFPA 52 guidelines with proper clearances from obstructions and secured every 12".
  - All high pressure hoses shall be Conductive Core hoses, have a polyurethane cover and electrically conductive core tube with fiber reinforced insulation along with a 302 SS spring guard to alleviate crimping of the hose and stainless steel end connections for maximum durability.
  - All high pressure hoses shall have a minimum working pressure of 5,000 PSI and 20,000 PSI burst pressure.
  - All fuel hoses exposed to heat shall be shielded by aluminum foil-faced fiberglass fabric wrap with a high-temperature acrylic pressure-sensitive adhesive backing for proper installation. Protection to high heat exposure and retains residual strength after exposure to flame.
    - Working pressure 5,000 psi and burst 20,000 psi
    - 0.035 inch thickness (nominal)
    - 0.195 lb/sft weight (typical)
    - 250 lb/in tensile strength per FED standard
    - Aluminum/Fiberglass Temperature Range -65F to 1000F
  - All fittings, gaskets, & packing material shall be compatible with the CNG fuel under the maximum service conditions.
  - All fittings shall be constructed of American Made Stainless Steel.
  - All fittings and tubing shall be ANSI approved for CNG application and shall be capable of withstanding a hydrostatic test of at least four times the rated service pressure without structural failure (NFPA 52).
  - All fastening hardware shall be grade 8 standard made in America.
  - Fuel fill receptacle shall be Sherex 1000 or equivalent.

- Compressed Natural Gas Fuel Cylinder Protection
  - Each CNG fuel cylinder shall be secured to the frame of the vehicle to prevent damage from road hazards, slippage, loosening, or rotation using a method capable of withstanding a static force in the six principal directions container(s) [Front, Back, Left, Right, Top and Bottom].
  - Shielding shall be constructed in a way to provide proper drainage of water that may cause structural damage.
  - Shields shall be bolted to brackets for ease of removal and proper re-installation.
  - All shields shall be constructed of 16 gauge stainless steel or equivalent covering front, back, sides, and bottom of exposed areas of each cylinder for maximum protection.

- Safety Features

  - High pressure fuel system shall be equipped with a purge to allow proper ventilation of high pressure fuel lines before service work is conducted.
  - High pressure fuel system shall be equipped with a quarter turn valve to safely stop the flow of gas to the engine.
  - High pressure fuel system shall be equipped with a one-way check valve to prevent a fuel leak during or after fueling.
  - High pressure fuel system shall be equipped with two pressure gauges. One pressure gauge mounted by the purge valve for safe service of the fuel lines. The second pressure gauge shall be mounted externally by the fuel fill receptacle for safe and accurate fueling.
  - High pressure fuel system shall be equipped with melamine foam with flame and excessive heat barrier to protect and increase insulation performance of components exposed to heat such as hoses and cylinders.
  - A pressure regulator inlet and each chamber shall be designed for its service pressure with a pressure safety factor of at least four times service pressure without structural failure.
  - Low-pressure chambers shall provide for overpressure relief or shall be able to withstand the service pressure of the upstream pressure chamber.

- CNG Fuel Capacity
  - Requirements are stated in SCF @ 3,600 PSI. Gasoline Gallon Equivalent capacity is calculated @ 122 SCF per 1 GGE TO MEET RFP Specs.

Green Alternative Systems

GASN-E450-SFS3-13-A

Ford E-450 Cutaway CNG Transit Specification

COMPRESSED NATURAL GAS FUEL SYSTEM

- Ford E-450 Cutaway Chassis
    - 6.8L V-10 Gasoline Engine
    - Gaseous Fuel Prep Package Required
    - 30 Gasoline Gallon Equivalents
    - EPA & CARB Certified
    - FTA Compliant
        - 7 Year/200,000 Mile Test Complete per this specification, as installed by the upfitter of record (Green Alternative Systems) per the FTA (Federal Transit Administration) bus testing site in Altoona, PA.

GREEN ALTERNATIVE SYSTEMS STANDARD FEATURES

- Engine System
    - BAF Technologies Cal-Comp Engine System
    - Ford Qualified Vehicle Modifier Engine System Developer
    - Ford Qualified Calibration Modifier Engine System Developer
    - Ford Quality Fleet Care Engine System Developer
    - ISO Certified Engine System Developer
    - CARB & EPA Certified

- Fuel Delivery System
    - Ford Qualified Vehicle Modifier Alternative Fuel System Installer
    - Altoona Tested 7 year/200,000 Mile Test

- Compressed Natural Gas Fuel Cylinders

  - All CNG vehicle fuel cylinders shall meet the federal government's FMVSS 304 (49 CFR 571.304), Compressed Natural Gas Fuel Container Integrity. All CNG vehicle fuel cylinders shall meet ANSI/CSA NGV2, Basic Requirements for Compressed Natural Gas Vehicle Fuel Containers.
  - Cylinders shall be fabricated of aluminum liner fully wrapped with epoxy-impregnated aerospace-grade carbon fiber (Type 3).
  - All cylinders shall be designed for CNG service and shall be permanently marked "CNG Only" by the manufacturer.
  - Marked service life of CNG cylinder shall be 20 years from manufacture date. * Cylinders shall be manufactured, inspected, marked, tested, retested, equipped, and used in accordance with the following: (1) U.S. Department of Transportation (DOT) or Transport Canada (TC) regulations, exemptions, or special permits (2) ANSI/IAS NGV2, Basic Requirements for Compressed Natural Gas Vehicle (NGV) Fuel Containers, specifically for CNG service (3) CSA B51, Boiler, Pressure Vessel and Pressure Piping Code
  - All cylinders valves shall be equipped with a solenoid electric shut-off valve allowing full integration with the ignition switch.
  - All cylinders shall be equipped with a pressure relief device (PRD) to automatically relieve pressure from cylinders to prevent damage once excessive temperature has been realized (NFPA 52).
  - All cylinder valves have a manual shut off valves which requires no tools to operate.
  - All cylinder valves have an excess flow device to reduce/stop the flow of high pressure fuel leaks.
  - All cylinder valves shall be accessible through the gravel shields for easy quick access.

- High Pressure Fuel Lines and Emergency Vent Line

  - All 3/8" tubing shall be minimum specification .049 wall thicknesses rated for working pressure of 4800 psi, free of scratches, suitable for bending and flaring.
  - All 1/2" tubing shall be minimum specification .049" wall thicknesses rated for working pressure of 3700 psi, free of scratches, suitable for bending and flaring.

- All 3/8" stainless steel tubing shall be installed per NFPA 52 guidelines with proper clearances from obstructions and secured every 24".
- All 1/2" stainless steel tubing shall be installed per NFPA 52 guidelines with proper clearances from obstructions and secured every 12".
- All high pressure hoses shall be Conductive Core hoses, have a polyurethane cover and electrically conductive core tube with fiber reinforced insulation along with a 302 SS spring guard to alleviate crimping of the hose and stainless steel end connections for maximum durability.
- All high pressure hoses shall have a minimum working pressure of 5,000 PSI and 20,000 PSI burst pressure.
- All fuel hoses exposed to heat shall be shielded by aluminum foil-faced fiberglass fabric wrap with a high-temperature acrylic pressure-sensitive adhesive backing for proper installation. Protection to high heat exposure and retains residual strength after exposure to flame.
    - Working pressure 5,000 psi and burst 20,000 psi
    - 0.035 inch thickness (nominal)
    - 0.195 lb/sft weight (typical)
    - 250 lb/in tensile strength per FED standard
    - Aluminum/Fiberglass Temperature Range -65F to 1000F
- All fittings, gaskets, & packing material shall be compatible with the CNG fuel under the maximum service conditions.
- All fittings shall be constructed of American Made Stainless Steel.
- All fittings and tubing shall be ANSI approved for CNG application and shall be capable of withstanding a hydrostatic test of at least four times the rated service pressure without structural failure (NFPA 52).
- All fastening hardware shall be grade 8 standard made in America.
- Fuel fill receptacle shall be Sherex 1000 or equivalent.

- Compressed Natural Gas Fuel Cylinder Protection

    - Each CNG fuel cylinder shall be secured to the frame of the vehicle to prevent damage from road hazards, slippage, loosening, or rotation using a method capable of withstanding a static force in the six principal directions container(s) [Front, Back, Left, Right, Top and Bottom].

- All cylinders are to be mounted inside of the main chassis frame rails for maximum crash protection.
- Shielding shall be constructed in a way to provide proper drainage of water that may cause structural damage.
- Shields shall be bolted to brackets for ease of removal and proper re-installation.
- All shields shall be constructed of 16 gauge stainless steel or equivalent covering front, back, sides, and bottom of exposed areas of each cylinder for maximum protection.

- Safety Features

  - High pressure fuel system shall be equipped with a purge valve to allow proper ventilation of high pressure fuel lines before service work is conducted.
  - High pressure fuel system shall be equipped with a quarter turn valve to safely stop the flow of gas to the engine.
  - High pressure fuel system shall be equipped with a one-way check valve to prevent a fuel leak during or after fueling.
  - High pressure fuel system shall be equipped with two pressure gauges. One pressure gauge mounted by the purge valve for safe service of the fuel lines. The second pressure gauge shall be mounted externally by the fuel fill receptacle for safe and accurate fueling.
  - High pressure fuel system shall be equipped with melamine foam with flame and excessive heat barrier to protect and increase insulation performance of components exposed to heat such as hoses and cylinders.
  - A pressure regulator inlet and each chamber shall be designed for its service pressure with a pressure safety factor of at least four times service pressure without structural failure.
  - Low-pressure chambers shall provide for overpressure relief or shall be able to withstand the service pressure of the upstream pressure chamber.

- CNG Fuel Capacity
  - Requirements are stated in SCF @ 3,600 PSI. Gasoline Gallon Equivalent capacity is calculated @ 122 SCF per 1 GGE TO MEET RFP Specs.